AMENDED PRELIMINARY AND FINAL SITE PLANS FOR

EPSTEINS: MAPLE AVENUE TOWNHOMES

BLOCK 6005, LOT 10

TOWN OF MORRISTOWN
MORRIS COUNTY, NEW JERSEY

TAX MAP SHEET 61

INDEX OF SHEETS	
SHEET	DESCRIPTION
1	COVER SHEET \ LOCATION MAP
2	KEY MAP
3	EXISTING CONDITIONS AND DEMOLITION PLAN
4	LAYOUT AND DIMENSIONING PLAN
5	GRADING PLAN
6	UTILITIES PLAN
7–8	DRIVEWAY & SANITARY SEWER PROFILES
9	LANDSCAPE AND LIGHTING PLAN
10	SOIL EROSION AND SEDIMENT CONTROL PLAN
11–14	CONSTRUCTION DETAILS

LOCATION MAP
SCALE: 1"= 300'

DECEMBER 3, 2011

APPROVALS:

I HAVE REVIEWED THIS SITE PLAN AND CERTIFY THAT IT COMPLIES WITH ALL APPROVALS GRANTED BY THE APPROVING AUTHORITY .

PLANNING BOARD ENGINEER DATE

APPROVED BY THE PLANNING BOARD OF THE TOWN OF MORRISTOWN.

CHAIRMAN DATE

SECRETARY DATE

PROPERTY OWNER/APPLICANT:

Morristown Epsteins, L.L.C.
119 Cherry Hill Road Suite. 110
Parsippany, NJ 07054

ENGINEER:

OMLAND ENGINEERING ASSOCIATES, INC.
54 Horsehill Road
Cedar Knolls, New Jersey 07927
Phone: 973-359-8400
FAX: 973-359-8455
E-mail: oea@omland.com
NJ Certificate of Authorization
No. 24GA28043700

STANLEY T. OMLAND, N.J. Professional Engineer, Lic. 24GE03069600

THIS DRAWING AND ALL INFORMATION CONTAINED HEREIN IS AUTHORIZED FOR USE ONLY BY THE PARTY FOR WHOM THE WORK WAS CONTRACTED OR TO WHOM IT IS CERTIFIED. THIS DRAWING MAY NOT BE COPIED, REUSED, DISCLOSED, DISTRIBUTED OR RELIED UPON FOR ANY OTHER PURPOSE WITHOUT THE WRITTEN CONSENT OF OMLAND ENGINEERING ASSOCIATES, INC. COPYRIGHT 2011 OMLAND ENGINEERING ASSOCIATES, INC. ALL RIGHTS RESERVED

PROJ.: 030810 CHKD:

PROPERTY OWNERS LIST

PROVIDED BY TOWN OF MORRISTOWN TAX ASSESSOR, DATED JANUARY 3, 2008.

Morris County Board of Taxation
COUNTY OF MORRIS, NEW JERSEY
P.O. Box 900, Morristown, NJ 07963-0900
http://mcweb1.co.morris.nj.us/TaxBoard
Thu Jan 03 11:44:19 EST 2008
* Maximum of 500 records available on report

Projection: State Plane (FIPS 2900)
Datum: NAD83
Units: Feet

Buffer Results

Selected buffer distance: 200 | Number of parcels selected: 57

#	Tax PIN	Add'l Lot	Property Location	Property Owner
1	24_6001_14		41 MARKET ST	SIMON, HARRY/LISA 399 MT. KEMBLE AVE MORRISTOWN, NJ 07960
2	24_6002_1		49-55 MARKET ST	SIMON, HARRY/LISA 399 MT KEMBLE AVE MORRISTOWN, NJ 07960
3	24_6003_10		73 MARKET ST	HELLRIEGEL, ROBERT J 73 MARKET ST MORRISTOWN, NJ 07960
4	24_6003_11		77 MARKET ST	SIMON, HARRY/LISA 399 MT KEMBLE AVE MORRISTOWN, NJ 07960
5	24_6003_12		79 MARKET ST	SIMON, HARRY/LISA 399 MT. KEMBLE AVE MORRISTOWN, NJ 07960
6	24_6003_15		1 MT KEMBLE AVE	THE MT KEMBLE HOME, INC 1 MT KEMBLE AVE MORRISTOWN N J 07960
7	24_6003_16		3 MT KEMBLE AVE	MILELLI REALTY PARTNERSHIP 20 CUTLER ST MORRISTOWN, NJ 07960
8	24_6003_8		69 BANK ST	MCDONALD PONTIAC INC%MCDONALD MOTORS CORP,PO BOX 428 MORRISTOWN, NJ 079630428
9	24_6003_9		n/a	n/a
10	24_6004_10		17 DE HART ST	KIRBY, FRED M II 17 DE HART ST P.O.BOX 151 MORRISTOWN, NJ 079600151
11	24_6004_11		22 MAPLE AVE	NATL.FOOTBALL FOUNDATION & COLLEGE 433 E.LAS COLINAS BL.12FL IRVING,TX 75039
12	24_6004_12		13 DE HART ST	EPSTEINS B RENTALS LLC 233 CANOE BROOK RD SHORT HILLS, NJ 07078
13	24_6004_13		6-10 MAPLE AVE	MAPLE RESIDENTIAL ASSOCIATES, LLC 248 COLUMBIA TPKE FLORHAM PARK, NJ 07932
14	24_6004_14		4 MAPLE AVE	WERTHEIMER FAMILY LIMITED PARTNERSH RANNEY HILL RD MORRISTOWN, NJ 07960
15	24_6004_15		2 MAPLE AVE	WERTHEIMER FAMILY LIMITED PARTNERSH RANNEY HILL RD MORRISTOWN, NJ 07960
16	24_6004_16		n/a	n/a
17	24_6004_8		n/a	n/a
18	24_6005_1		23 DE HART ST	HMC PROPERTIES INC%ATLAS TAX (HAM) SUITE 1400-181 BAY ST TORONTO ON M5J2V1 00000
19	24_6005_10		7 MAPLE AVE	ROSELAND PROPERTY(EPSTEIN) 233 CANOE BROOK RD SHORT HILLS NJ 07078
20	24_6005_11		6 MAC CULLOCH AVE	CASHEL ROAD PROPERTY MANAGEMENT LLC 52 ELM ST MORRISTOWN, NJ 07960
21	24_6005_12		n/a	n/a
22	24_6005_12.01		4 MAC CULLOCH AVE	SACCAMONA, FRANK N 4 MAC CULLOCH AVE UNIT 1 MORRISTOWN, NJ 07960
23	24_6005_12.02		4 MAC CULLOCH AVE.#2	SPRING STREET PROPERTIES 81 INDUSTRIAL RD BERKELEY HEIGHTS, NJ 07922
24	24_6005_12.03		4 MAC CULLOCH AVE.#3	SPRING STREET PROPERTIES 81 INDUSTRIAL RD BERKELEY HEIGHTS, NJ 07922
25	24_6005_12.04		4 MAC CULLOCH AVE	SPECTOR, NORMAN 4 MAC CULLOCH AVE MORRISTOWN, NJ 07960
26	24_6005_12.05		4 MAC CULLOCH AVE.#5	PERKINS, DAVID 4 MACCULLOCH AVE UNIT 5 MORRISTOWN, NJ 07960
27	24_6005_12.06		4 MAC CULLOCH AVE.#6	SPRING STREET PROPERTIES 81 INDUSTRIAL RD BERKELEY HEIGHTS, NJ 07922
28	24_6005_12.07		4 MAC CULLOCH AVE.#7	DOOLING, MICHAEL 4 MACCULLOCH AVE UNIT 7 MORRISTOWN, NJ 07960
29	24_6005_12.08		4 MAC CULLOCH AVE.#8	MC CARTHY, PATRICK J. II 4 MACCULLOCH AVE.UNIT 8 MORRISTOWN, N.J. 07960
30	24_6005_13		78 MARKET ST	SEVEN EIGHT MARKET STREET MORRISTOW 1 VALLEY ST HAWTHORNE, NJ 07506
31	24_6005_14		74 MARKET ST	HOEFFNER, HERMINE 74 MARKET ST MORRISTOWN N J 07960
32	24_6005_15		64-66 MARKET ST	66 MARKET STREET LLC 64-66 MARKET ST MORRISTOWN, NJ 07963
33	24_6005_16		58-62 MARKET ST	METROPOLITAN, LLC P.O. BOX 163 CONVENT STATION, NJ 07961
34	24_6005_17		1 MAPLE AVE	RIOS, ROLANDO G & KYU CHIN P O BOX 203 MORRISTOWN, NJ 07960
35	24_6005_18		1 1/2 MAPLE AVE	TO, NO THI 1 1/2 MAPLE AVE MORRISTOWN NJ 07960
36	24_6005_19		3 MAPLE AVE	SPERBER,PHILIP & DOREEN FAYE 4 GLEN AIRLEE CT MORRIS TOWNSHIP, NJ 07961
37	24_6005_2		27 DE HART ST	GODBY, MICHAEL & KATHRYN R. 85 OVERLOOK RD MORRISTOWN N J 07960
38	24_6005_20		5 MAPLE AVE	KPC PROPERTIES LLC 5 MAPLE AVE MORRISTOWN, NJ 079630859
39	24_6005_3		29 DE HART ST	29 DEHART STREET LLC 27 DEHART ST MORRISTOWN, NJ 07960
40	24_6005_4		31 DE HART ST	ROCK, HOWARD S/SAUNDRA J. 7 OVERBROOK RD RANDOLPH, NJ 07869
41	24_6005_6		35 DE HART ST	MAGNIER, WILLIAM T 35 DE HART ST MORRISTOWN, NJ 07960
42	24_6005_7		39 DE HART ST	ROCK, HOWARD S/SAUNDRA J. 7 OVERBROOK RD RANDOLPH, NJ 07869
43	24_6005_8		41 DE HART ST	SCHEER REALTY 41 LLC L 18 MACCULLOCH MORRISTOWN, NJ 07960
44	24_6005_9		18 MAC CULLOCH AVE	SCHEER REALTY LLC 18 MAC CULLOCH AVE MORRISTOWN,NJ 07960
45	24_6006_1		2 MT KEMBLE AVE	EXXON CORPORATION PO BOX 53 HOUSTON, TEXAS 770010053
46	24_6006_14		8 MT KEMBLE AVE	HAKAKIAN, JAVID/SIMA 12 MT. KEMBLE AVE MORRISTOWN, NJ 07960
47	24_6006_2		7 MACCULLOCH AVE	V&C FINANCIAL SERVICES, LLC PO BOX 1123 MADISON, NJ 07940
48	24_6006_3		1 WETMORE AVE	ADLER, SUSAN 1 WETMORE AVE MORRISTOWN, NJ 07960
49	24_6006_4		3 WETMORE AVE	MC MANUS, ANN 3 WETMORE AVE MORRISTOWN N J 07960
50	24_6006_5		5 WETMORE AVE	BARTER, DAVID J/MARY 5 WETMORE AVE MORRISTOWN, NJ 07960
51	24_6101_10		12 DE HART ST	FIRST STATES INVESTORS%BURR WOLFF PO BOX 167129 IRVING, TX 75016
52	24_6104_1		n/a	n/a
53	24_6104_2		35 MAPLE AVE	BELL ATLANTIC-PROPERTY TAX DEPT. PO BOX 152206 IRVING, TX 750152206
54	24_6104_3		28 DE HART ST	TWO EIGHT DEHART STREET LLC 28 DE HART ST MORRISTOWN N J 07960
55	24_6104_4		24 DE HART ST	DE HART REALTY CORP. 26 DEHART ST MORRISTOWN, NJ 07960
56	24_7401_18		4 WETMORE AVE	MCINTOSH, WILLIAM D/ELAINE W 4 WETMORE AVE MORRISTOWN, NJ 07960
57	24_7401_19		2 WETMORE AVE	SMITH, MICHAEL & ETALS 20 RAYMOND RD MORRIS PLAINS, NJ 07950

UTILITIES LIST

VERIZON
210 Malapardis Road
Cedar Knolls, NJ 07927

JCP&L
300 Madison Avenue
Morristown, NJ 07962

PSE&G
Manager – Corporate Properties
80 Park Plaza, T6B
Newark, NJ 07102

SMCMUA
19 Saddle Road
Cedar Knolls, NJ 07901

Cablevision of Morris
683 Route 10, East
Randolph, NJ 07869

Morris County Clerk's Office
PO Box 315
Morristown, NJ 07963-0315

NJ Department of Transportation
200 Stierle Court
Mt. Arlington, NJ 07856

PARKING SPACES PER RSIS

EXISTING	159 STALLS	
REQUIRED		
RESIDENTIAL 3 BEDROOM UNITS	(2.3 SPACE PER UNIT) X (18 UNITS)	42
GUESTS	(.5 SPACE PER UNIT) X (18 UNITS)	9
	TOTAL	51
PROPOSED		
RESIDENTIAL 3 BEDROOM UNITS	(3.5 SPACE PER UNIT) X (18 UNITS)	63
GUESTS	(.5 SPACE PER UNIT) X (18 UNITS)	9*
	TOTAL	72

NOTE (EPSTEINS REHABILITATION PLAN, P. 22):

THE BOARD MAY WAIVE THE REQUIREMENT FOR ADDITIONAL GUEST PARKING AND GRANT A DE MINIMIS EXCEPTION FROM THE RESIDENTIAL SITE IMPROVEMENT STANDARDS (RSIS) IF THE APPLICANT CAN DEMONSTRATE THE AVAILABILITY OF PUBLIC PARKING WITHIN TWO HUNDRED AND FIFTY (250) FEET OF THE TOWNHOUSES OR TOWNHOUSE COMPLEX.

* GUEST PARKING SPACES TO BE CONSIDERED AT MORRISTOWN PARKING AUTHORITY PARKING GARAGE

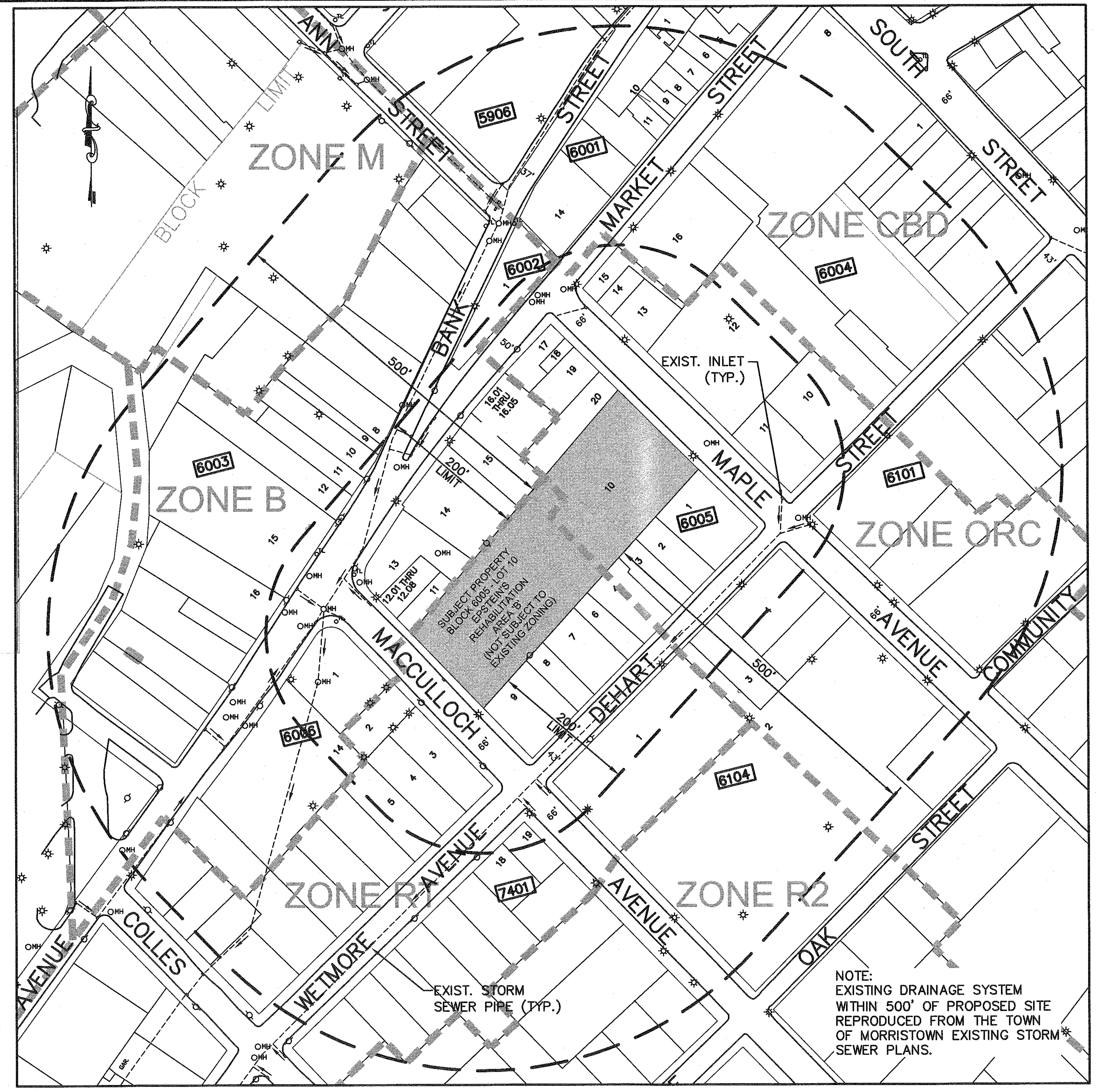

KEY MAP

ZONING TABLE

BLOCK 6005, LOT 10
ZONING: RT– RESIDENTIAL TRANSITION & ORC OFFICE RESIDENTIAL CHARACTER
NOTE: ALL OF BLOCK 6005 LOT 10 IS INCLUDED IN 'EPSTEIN'S REHABILITATION PLAN' AREA B – MODERATE RESIDENTIAL DENSITY
PERMITTED USE – RESIDENTIAL INCLUDING SINGLE FAMILY, TWO-FAMILY DWELLINGS, TOWNHOUSES/TOWNHOUSE COMPLEXES

ITEM	PERMITTED	PROPOSED	EXISTING
MINIMUM LOT AREA	6,250 S.F.	66,793 S.F. (1.533 AC.)	66,793 S.F. (1.533 AC.)
MAXIMUM NUMBER OF DWELLINGS UNITS IN AREA "B"	20 UNITS	18 UNITS TOTAL	N/A (PARKING LOT)
LOT WIDTH	50'	161.51'	161.51'
LOT DEPTH	100'	441.40' (AVERAGE)	441.40' (AVERAGE)
SETBACKS			
MIN. FRONT YARD (MEASURED FROM FACE OF CURB)	10'	30'	0' (ON LINE)
MIN. REAR YARD	20'	N/A (NOT APPLICABLE)	N/A
MIN. SIDE YARD	10'	2.6' (WALL) (V)	0' (ON LINE)
MAXIMUM LOT COVERAGE (BUILDINGS)	40%	29.6%	16.1% (0.25 AC)
MAXIMUM IMPERVIOUS COVERAGE	80%	74% (1.141 AC)	96%
MAXIMUM BUILDING HEIGHT	3 STORIES OR 42' **	LESS THAN 42'	LESS THAN 3 STORIES OR 45'
TOWNHOUSE COMPLEX STANDARD REQUIREMENTS			
MIN. SEPARATION BETWEEN BUILDINGS	15'	58'	N/A
MAXIMUM DWELLING UNITS PER TOWNHOUSE BUILDING	5	5	N/A
MAXIMUM BUILDING LENGTH FOR TOWNHOUSE	160'	118.3'	N/A
MINIMUM BUFFER TO ADJACENT USES OR DISTRICTS	5'	10'	N/A
MINIMUM CORNER CLEARANCE–DETERMINED BY USING 20 FEET OF EACH STREET LINE MEASURED FROM THEIR INTERSECTION AND THE DIAGONAL LINE CONNECTING THE POINTS.		N/A	N/A
SIGNAGE	1 (3' HIGH X 5' LONG MAXIMUM)	2 (1' HIGH X 2.5' LONG) (V)	N/A

GENERAL NOTES

1. BOUNDARY AND TOPOGRAPHIC INFORMATION SHOWN HEREON TAKEN FROM A MAP ENTITLED, " SURVEY OF LANDS IN MORRISTOWN, MORRIS COUNTY, NEW JERSEY, TAX LOT 10 BLOCK 6005, PREPARED BY RICHARD F. SMITH, JR. PROFESSIONAL LAND SURVEYOR, DATED JUNE 7, 2004, LAST UPDATE JUNE 21, 2004.
2. NO FRESHWATER WETLANDS PRESENT ON SITE.
3. MORRIS COUNTY SOIL CONSERVATION DISTRICT SHALL BE NOTIFIED IN WRITING 72 HOURS PRIOR TO LAND DISTURBANCE.
4. UNDERGROUND UTILITIES SHOWN HEREON ARE APPROXIMATE, THEIR ACCURACY OR COMPLETENESS ARE NOT GUARANTEED BY THE ENGINEER. MARKOUTS FROM UTILITY COMPANIES AND FIELD CONFIRMATION BY CONTRACTOR MUST BE MADE PRIOR TO CONSTRUCTION SO THAT DISTURBANCE OR DISRUPTION TO THESE UTILITIES MAY BE AVOIDED.
5. IT IS THE CONTRACTORS RESPONSIBILITY TO CALL OMLAND ENGINEERING ASSOCIATES, INC. AND CONFIRM THAT HE HAS THE LATEST REVISION TO THIS SET OF PLANS BEFORE BEGINNING CONSTRUCTION.
6. THE CONTRACTOR SHALL DETERMINE THE LOCATION AND DEPTH OF THE EXISTING UTILITY TO WHICH THE CONNECTION IS BEING MADE BEFORE LAYING PIPE, CONDUIT, ETC. DISCREPANCIES SHALL BE REPORTED TO THE ENGINEER. IN CASES WHERE THE CONSTRUCTION OF ITEMS MEET EXISTING STRUCTURES, SUCH AS CURB, PAVEMENT, SIDEWALK, UTILITIES, ETC. THE CONTRACTOR OR SURVEYOR STAKING SUCH ITEMS SHALL VERIFY THE ELEVATION & LOCATION OF THE EXISTING FEATURE PRIOR TO CONSTRUCTION. DISCREPANCIES SHALL BE BROUGHT TO THE ATTENTION OF THE ENGINEER.
7. THE CONTRACTOR IS TO VERIFY WITH THE OWNER OR ENGINEER AS TO WHAT THE PERMIT CONDITIONS, SPECIFICATIONS, AND/OR TESTING OBLIGATIONS ARE FOR ANY PERMITS INVOLVED. WRITTEN SPECIFICATIONS TAKE PRECEDENCE OVER WHAT IS SHOWN ON THE PLANS.
8. ALL EQUIPMENT, MATERIALS, ETC. SHALL BE CONFINED TO THE PROPERTY. NO ENCROACHMENT ONTO TOWN R.O.W. OR ADJACENT PROPERTIES IS PERMITTED, UNLESS SPECIFIED ON THE PLAN.
9. THE CONTRACTOR IS SOLELY RESPONSIBLE FOR CONSTRUCTION SITE SAFETY. ALL SAFETY PRECAUTIONS MUST BE UNDERTAKEN AND MAINTAINED AS REQUIRED BY LOCAL, STATE AND FEDERAL CODES.
10. SEE ARCHITECTURAL DRAWINGS FOR CONSTRUCTION DETAILS, BUILDING DIMENSIONS AND DRAINAGE AND UTILITY CONNECTIONS. SITE CONTRACTOR TO VERIFY THE SIZE, LOCATION AND ELEVATION OF ALL WATER, SEWER AND STORM DRAIN CONNECTIONS AT THE BUILDING WITH THE MECHANICAL CONTRACTOR BEFORE BEGINNING CONSTRUCTION.
11. ANY OMISSIONS IN THE STANDARD DETAILS OR LACK OF INFORMATION MUST BE BROUGHT TO THE ATTENTION OF THE CIVIL ENGINEER PRIOR TO CONSTRUCTION.
12. WALLS OR SIMILAR STRUCTURAL ELEMENTS MUST BE DESIGNED AND REVIEWED BY A LICENSED ENGINEER. STRUCTURAL DESIGN TO BE PROVIDED PRIOR TO CONSTRUCTION.
13. ALL ON–SITE WATERLINES SHALL HAVE A MINIMUM COVER OF 4 FEET.
14. SANITARY SEWER SHALL BE SEPARATED FROM THE WATER MAINS BY A DISTANCE OF AT LEAST 10 FEET HORIZONTALLY OR 18 INCHES VERTICALLY IF HORIZONTAL SEPARATION IS NOT POSSIBLE ALL SANITARY PIPE TO BE SDR–35.
15. ALL STORM AND SANITARY SEWER PIPE LENGTHS SHOWN ARE FROM CENTER OF STRUCTURE TO CENTER OF STRUCTURE.
16. ALL RCP TO BE CLASS III UNLESS OTHERWISE NOTED ON PLAN.
17. ALL AREA LEADER/ROOF DRAINS TO BE 6" SCHEDULE 35 PVC WITH TWO FEET MINIMUM COVER. ALL ROOF LEADER DRAINS ARE TO BE TIED INTO SUBSURFACE STORM DRAINAGE EXCEPT WHERE SURFACE DISCHARGE IS PERMITTED.
18. ROOF RAINS, DOWNSPOUTS AND LEADERS SHOW ON PLANS ARE SUBJECT TO FINAL ARCHITECTURAL DESIGN AND ARE SUBJECT TO REVIEW AND APPROVAL BY PLUMBING SUBCODE OFFICIAL.
19. FOOTING DRAINS SHALL BE TIED INTO NEAREST STORM DRAIN OR INLET WITH MINIMUM 2% SLOPE.
20. ALL SIDEWALK SHALL BE FOUR FEET WIDE, EXCEPT ADJACENT TO PARKING WHERE SIDEWALK SHALL BE SIX FEET IN WIDTH.
21. FIRE LANES SHALL BE PROVIDED IN ACCORDANCE WITH FIRE OFFICIAL'S REQUIREMENTS.
22. THE DWELLING FOOTPRINTS AND ASSOCIATED DRIVEWAY AND LOT GRADING SHOWN ON THESE PLANS IS CONCEPTUAL IN NATURE. THE INTENT IS TO DEPICT THE IMPACTS ASSOCIATED WITH THE PROTOTYPICAL DWELLING WHICH IS EXPECTED TO BE BUILT. THE ACTUAL DWELLING, DRIVEWAY AND ASSOCIATED GRADING WILL BE SELECTED AND DEPICTED ON PLOT PLANS BEFORE FINAL CONSTRUCTION.
23. NO FLOOD PLAIN EXISTS ON THE PROPERTY.
24. THE SITE WILL BE LIT FROM DUSK TO DAWN.
25. THE GARBAGE COLLECTION WILL OCCUR AT THE NORTH END OF EACH COMMON LANE DRIVEWAY.
26. ALL PRECAST STRUCTURES TO BE ABLE TO WITHSTAND HS 20 LOADING.
27. ALL SIDEWALK AND PAVEMENT SHALL BE RESTORED IF DAMAGED.
28. ALL UTILITY TRENCHES TO BE REPAIRED PER MORRISTOWN AND NJDOT STANDARDS, SEE DETAILS.
29. ONE WATER METER PIT TO BE PROVIDED FOR THE SITE.
30. EXISTING UTILITY CONNECTIONS TO BE ABANDONED PER UTILITY AUTHORITY STANDARDS.
31. ALL SANITARY SEWER PIPING AND APPURTENANCES SHALL BE INSTALLED IN ACCORDANCE WITH THE REQUIREMENTS OF THE MORRISTOWN SEWER DEPARTMENT AND THE PLUMBING SUBCODE OFFICAL.
32. LAUNDRY, BANNERS, ETC. SHALL BE PROHIBITED FROM BEING HUNG OFF BUILDINGS FRONTING MacCULLOCH AVENUE AND MAPLE AVENUE. ALL SATELLITE DISHES TO BE SCREENED.
33. BLANKET UTILITY EASEMENTS TO BE PROVIDED.
34. SUMP PUMPS ARE REQUIRED IF BASEMENTS ARE PROVIDED.

(V) VARIANCE REQUESTED

* PROVIDED ON STREET AND/OR MAPLE AVE GARAGE

** TOWNHOUSES IN AREA B AND C MAY BE CONSTRUCTED UP TO 42 FEET IN HEIGHT PROVIDED THE FOLLOWING CRITERIA ARE MET:

1. PROVIDE A BASE FOR EACH UNIT OF AT LEAST THREE (3) FEET IN HEIGHT. EMPHASIZE THE BASE WITH SUBSTANTIAL MATERIALS SUCH AS BRICK AND STONE THAT PROVIDE A VISUAL GROUNDING AND SENSE OF WEIGHTINESS TO THE BUILDING'S BASE. BASE MATERIALS SHOULD WRAP AROUND ALL VISIBLE CORNERS, EXTRUSIONS AND SIDES OF BUILDINGS TO AVOID A "PASTED–ON" APPEARANCE. THE GROUND LEVEL OF THE UNIT SHALL BE AT LEAST THREE (3) FEET ABOVE GRADE.
2. PROVIDE A PORCH OR COVERED STOOP AT LEAST SIX (6) FEET WIDE AND FOUR (4) FEET DEEP. STEPS LEADING TO THE PORCH OR STOOP SHOULD HAVE A SUBSTANTIAL APPEARANCE. PORCHES, STOOPS AND BAY WINDOWS MAY PROJECT UP TO FIVE (5) FEET INTO THE FRONT YARD SETBACK.
3. THE TOP LEVEL OF THE UNIT SHALL USE A PITCHED (SUCH AS GABLED OR GAMBREL) FORM AT THE FRONT FACADE, IN ORDER TO DOWNPLAY THE ADDITIONAL HEIGHT. FLAT OR OTHER ROOF FORMS WHICH EMPHASIZE THE FULL HEIGHT OF THE BUILDING AT THE FRONT FACADE ARE PROHIBITED. THE FRONT FACADE OF PITCHED ROOFS SHOULD BE ACCENTED WITH DORMER WINDOWS AND/OR CHIMNEYS. PORTIONS OF ROOFS VISIBLE FROM THE FRONT SHALL USE HIGH–QUALITY, ATTRACTIVE ROOFING MATERIAL.
4. WHERE TWO TOWNHOUSE COMPLEXES FACE EACH OTHER ACROSS A WALKWAY OR PRIVATE GREEN, THE MINIMUM SEPARATION BETWEEN THE FRONT FACADES OF UNITS SHALL BE FIFTY (50) FEET, IN ORDER TO PRESERVE SUNLIGHT INTO THE FRONT YARDS.

THESE PLANS ARE FINAL FOR SANITARY SEWER DESIGN

AMENDED PRELIMINARY AND FINAL SITE PLANS FOR
EPSTEINS: MAPLE AVENUE TOWNHOMES
KEY MAP
BLOCK 6005, LOT 10
TOWN OF MORRISTOWN, MORRIS COUNTY, NEW JERSEY

OMLAND ENGINEERING ASSOCIATES, INC.
54 Horsehill Road
Cedar Knolls, New Jersey 07927

DATE: 12/3/11
PROJ: 030810
SCALE: 1"=100'

REVISIONS: 1 2 3 4 5 6

SHEET No. 2 OF 14

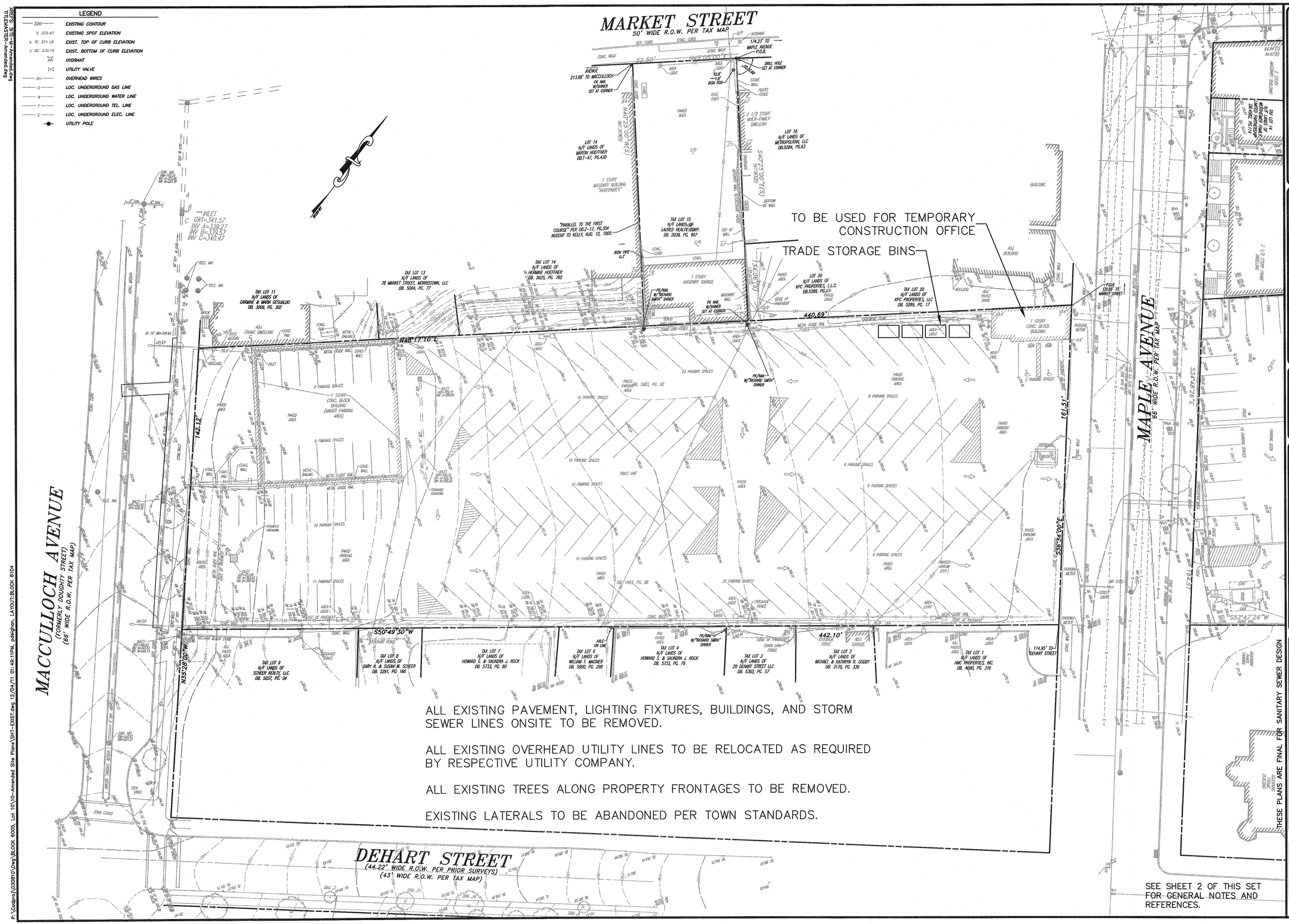

LEGEND

- 370 — EXISTING CONTOUR
- X 372.47 — EXISTING SPOT ELEVATION
- X TC 371.12 — EXIST. TOP OF CURB ELEVATION
- X BC 370.76 — EXIST. BOTTOM OF CURB ELEVATION
- HYDRANT
- UTILITY VALVE
- OH — OVERHEAD WIRES
- G — LOC. UNDERGROUND GAS LINE
- W — LOC. UNDERGROUND WATER LINE
- T — LOC. UNDERGROUND TEL. LINE
- E — LOC. UNDERGROUND ELEC. LINE
- UTILITY POLE

REVISIONS

9	
8	
7	
6	
5	
4	
3	
2	
1	

0 10 20 40 80 ft.

DATE: 12/3/11
PROJ.: 030810
SCALE: 1"= 20'
CHKD.

THIS DRAWING AND ALL INFORMATION CONTAINED HEREIN IS THE PROPERTY OF OMLAND ENGINEERING ASSOCIATES, INC. ALL RIGHTS RESERVED.

54 Horsehill Road
Cedar Knolls, New Jersey 07927
Phone: 973-539-8450
FAX: 973-359-9456
E-mail: oea@omland.com
Certificate of Authorization No. 24GA28043700

OMLAND
ENGINEERING ASSOCIATES, INC.

STANLEY T. OMLAND, P.E., Professional Engineer
DAVID J. BOCCK, N.J. Professional Land Surveyor

THESE PLANS ARE FINAL FOR SANITARY SEWER DESIGN

AMENDED PRELIMINARY AND FINAL SITE PLANS FOR
EPSTEINS: MAPLE AVENUE TOWNHOMES
EXISTING CONDITIONS AND DEMOLITION PLAN
BLOCK 6005, LOT 10
TOWN OF MORRISTOWN, MORRIS COUNTY, NEW JERSEY

SHEET No. 3 OF 14

XREFS: SITE-XR-Amended.dwg
TITLEMASTER-Amended.dwg

P:\Cadpro\030810\Dwg\BLOCK 6005, Lot 10\10-Amended Site Plans\SHT-EXIST.dwg BLOCK 6104, 12/4/2011 1:48:08 PM, pdeighan, 1:1

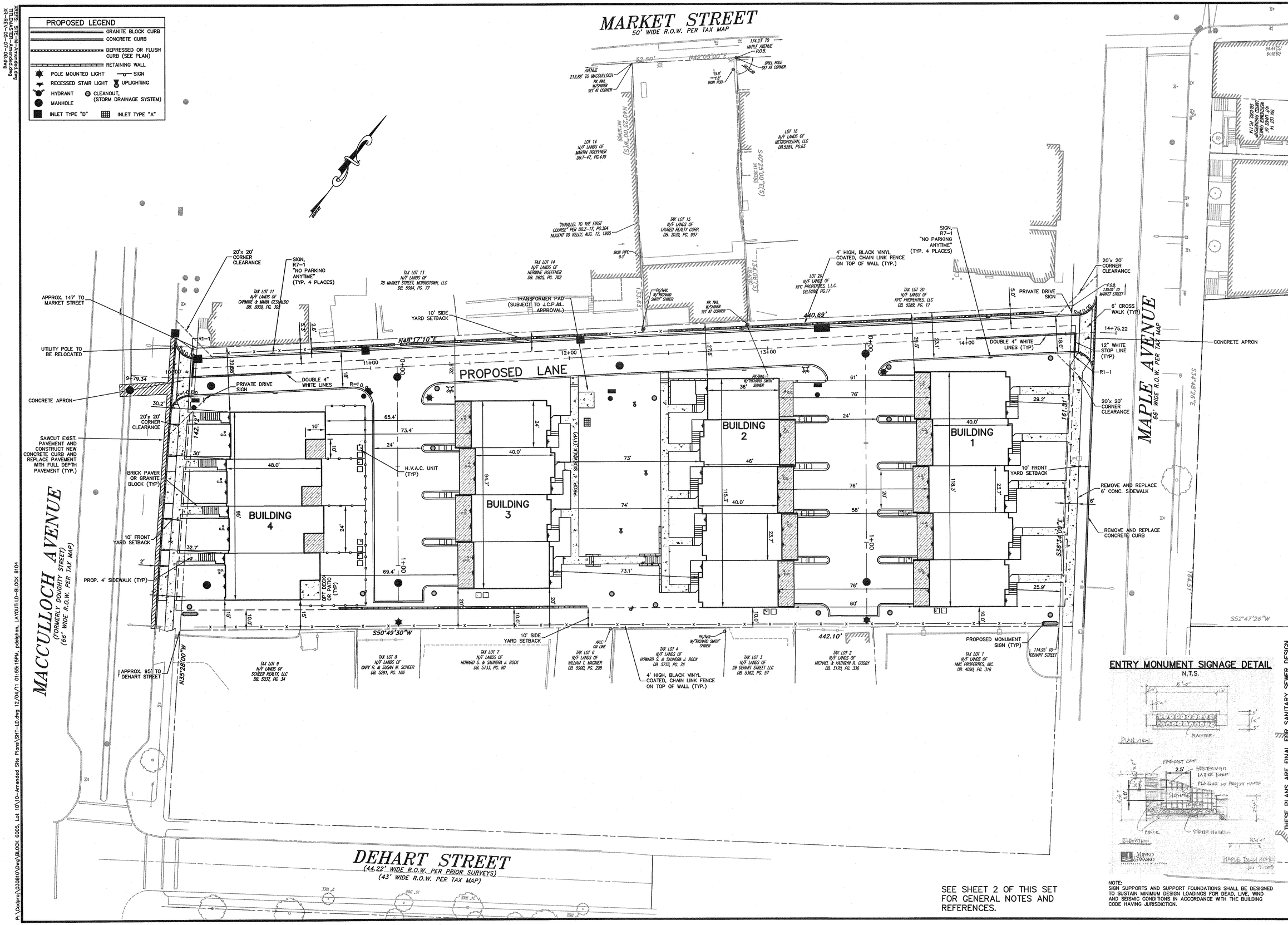

SEE SHEET 2 OF THIS SET FOR GENERAL NOTES AND REFERENCES.

NOTE:
SIGN SUPPORTS AND SUPPORT FOUNDATIONS SHALL BE DESIGNED TO SUSTAIN MINIMUM DESIGN LOADINGS FOR DEAD, LIVE, WIND AND SEISMIC CONDITIONS IN ACCORDANCE WITH THE BUILDING CODE HAVING JURISDICTION.

THESE PLANS ARE FINAL FOR SANITARY SEWER DESIGN

AMENDED PRELIMINARY AND FINAL SITE PLANS FOR
EPSTEINS: MAPLE AVENUE TOWNHOMES
LAYOUT AND DIMENSIONING PLAN
BLOCK 6005, LOT 10
TOWN OF MORRISTOWN, MORRIS COUNTY, NEW JERSEY

SHEET No. 4 OF 14

REVISIONS	
1	
2	
3	
4	
5	
6	
7	
8	
9	

DATE: 12/3/11 CHKD.
PROJ.: 030810.10
SCALE: 1" = 20'

OMLAND ENGINEERING ASSOCIATES, INC.
54 Horsehill Road
Cedar Knolls, New Jersey 07927
Phone: 973-359-8400
FAX: 973-359-8455
E-mail: oea@omland.com
NJ Certificate of Authorization No. 24GA28043700
STANLEY T. OMLAND, P.E., Professional Engineer
UNDER THE DIRECTION OF: JEFF SCHOEFFEL, P.E.

THIS DRAWING IS AN INSTRUMENT OF SERVICE AND IS PROPERTY OF OMLAND ENGINEERING ASSOCIATES, INC. ALL REPRODUCTIONS OR COPIES MADE OF THIS DRAWING, WHETHER OBTAINED OR NOT, ARE TO BE RETURNED TO THE OFFICE OF OMLAND ENGINEERING ASSOCIATES, INC. ALL REPRODUCTIONS OR COPIES MADE OF THIS DRAWING, WHETHER OBTAINED OR NOT, ARE TO BE RETURNED TO THE OFFICE OF OMLAND ENGINEERING ASSOCIATES, INC. ALL REPRODUCTIONS OR COPIES MADE OF THIS DRAWING, WHETHER OBTAINED OR NOT, ARE TO BE RETURNED TO THE OFFICE OF OMLAND ENGINEERING ASSOCIATES, INC.

XREF'S: SITE-M-Amended.dwg
TITLEMASTER-Amended.dwg
XR-REV-05-07-08.dwg
P:\Cadproj\030810\Dwg\BLOCK 6005, Lot 10\10-Amended Site Plans\SHT-LD.dwg, LD-BLOCK 6104, 12/4/2011 1:55:14 PM, pdeighan, 1:1

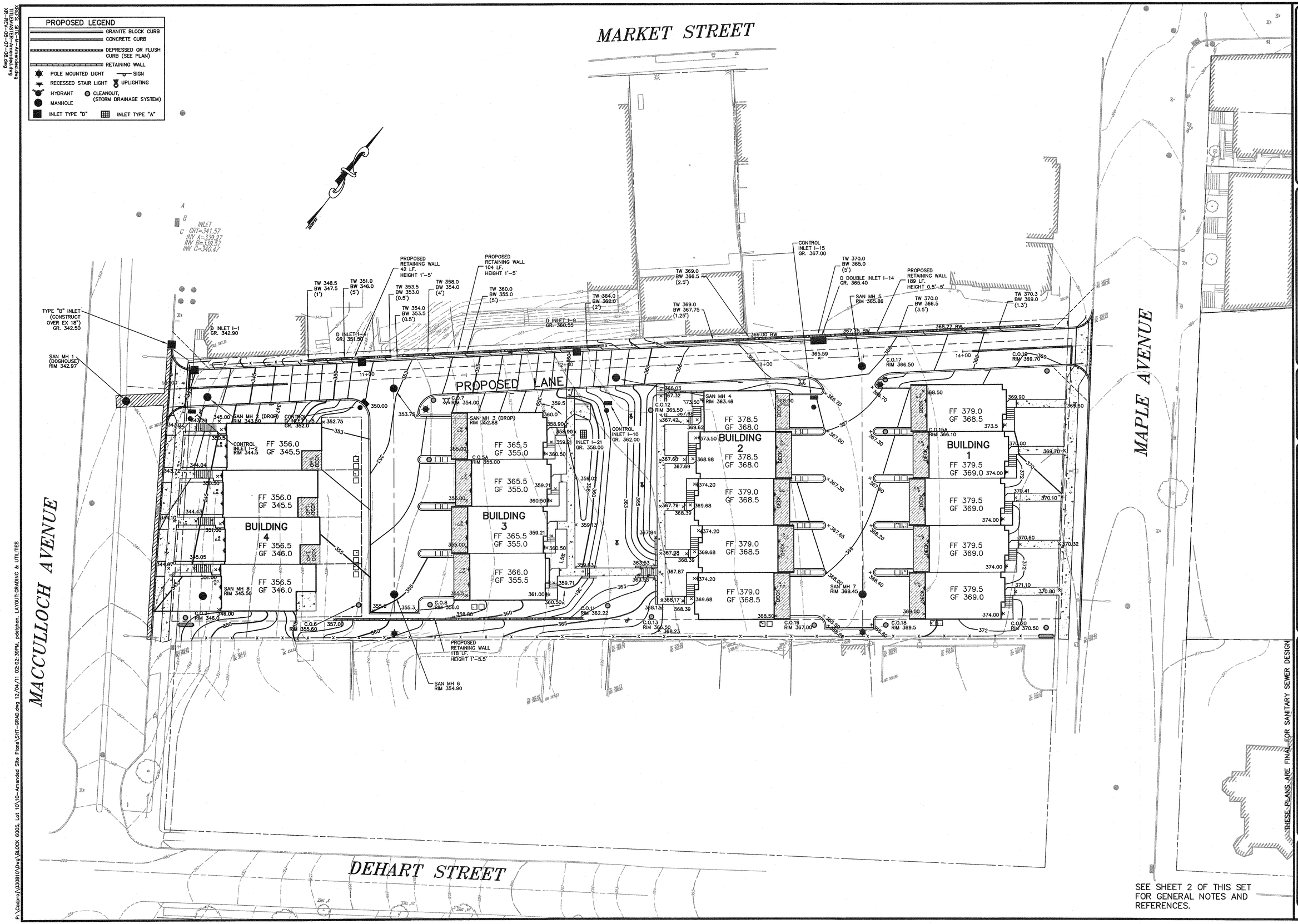

0 10 20 40 80 ft.

REVISIONS	
6	
5	
4	
3	
2	
1	

DATE: 12/3/11 CHKD.
PROJ.: 030810.10
SCALE: 1"= 20'

OMLAND ENGINEERING ASSOCIATES, INC.
54 Horsehill Road
Cedar Knolls, New Jersey 07927
Phone: 973-359-8455
FAX: 973-359-8455
E-mail: oea@omland.com
NJ Certificate of Authorization No. 24GA28043700
STANLEY T. OMLAND, P.E., Professional Engineer Lic. 24GE02059800
VIDEE S. DUCA, N.J. Professional Land Surveyor Lic. 24GS03029600

THESE PLANS ARE FINAL FOR SANITARY SEWER DESIGN

AMENDED PRELIMINARY AND FINAL SITE PLANS FOR
EPSTEINS: MAPLE AVENUE TOWNHOMES
GRADING PLAN
BLOCK 6005, LOT 10
TOWN OF MORRISTOWN, MORRIS COUNTY, NEW JERSEY

SHEET No. 5 OF 14

XREFS: SITE-M-Amended.dwg
TITLEMASTER-Amended.dwg
XR-REV-03-07-08.dwg

P:\Cadpro\030810\Dwg\BLOCK 6005, Lot 10\10-Amended Site Plans\SHT-GRAD.dwg, Grading & Utilities, 12/4/2011 2:22:37 PM, pdelgham, 1:1

P:\Cadpro\030810\Dwg\BLOCK 6005, Lot 10\10-Amended Site Plans\SHT-GRAD.dwg 12/04/11 02:02:39PM, pdelgham, LAYOUT:GRADING & UTILITIES

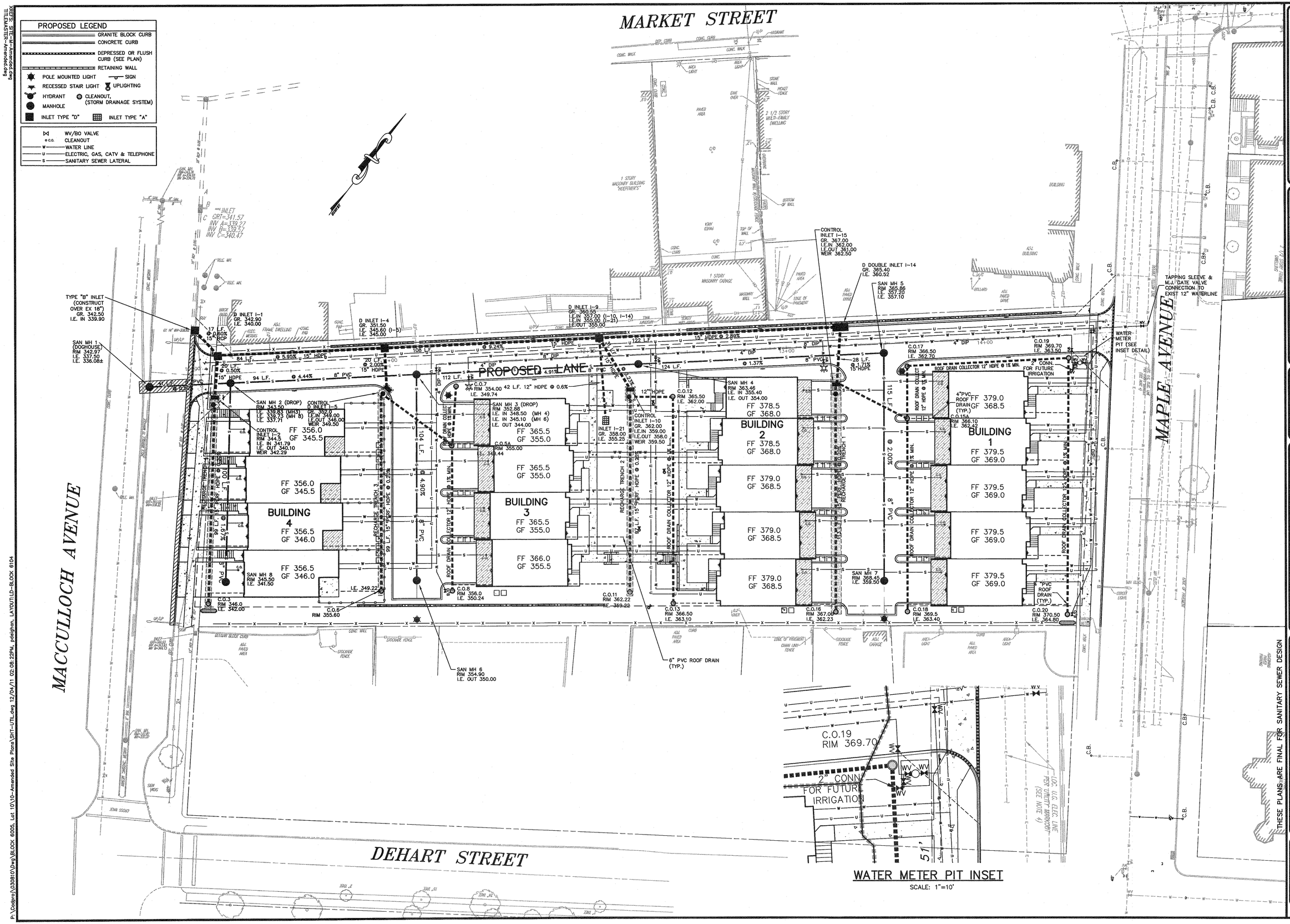

REVISIONS		
1		
2		
3		
4		
5		
6		
7		
8		
9		

0 10 20 40 80 ft.

DATE: 12/3/11 CHKD.
PROJ.: 030810.10
SCALE: 1"= 20'

THIS DRAWING AND ALL INFORMATION CONTAINED HEREIN IS THE PROPERTY OF OMLAND ENGINEERING ASSOCIATES, INC. FOR USE BY THE PARTY FOR WHOM IT IS CERTIFIED. THIS DRAWING MAY NOT BE REPRODUCED IN WHOLE OR IN PART WITHOUT OR SALES UPON FOR ANY OTHER PURPOSE WITHOUT THE WRITTEN CONSENT OF OMLAND ENGINEERING ASSOCIATES, ENGINEERS AND LAND SURVEYORS.

54 Horsehill Road
Cedar Knolls, New Jersey 07927
PH: 973-539-9500 973-539-9500
FAX: 973-539-8455
E-mail: oea@omland.com
N.J. Certificate of Authorization No. 24GA28043700
OMLAND ENGINEERING ASSOCIATES, INC.
STANLEY T. OMLAND, P.E., Professional Engineer No. 24GE03698500
DAVID T. DOWDAL, N.J. Professional Land Surveyor No. 24GS03728300

THESE PLANS ARE FINAL FOR SANITARY SEWER DESIGN

AMENDED PRELIMINARY AND FINAL SITE PLANS FOR
EPSTEINS: MAPLE AVENUE TOWNHOMES

UTILITY PLAN

BLOCK 6005, LOT 10
TOWN OF MORRISTOWN, MORRIS COUNTY, NEW JERSEY

SHEET No. 6 OF 14

XREF'S SITE-M-Amended.dwg
TITLEMASTER-Amended.dwg

P:\Codproj\030810\Dwg\BLOCK 6005, Lot 10\10-Amended Site Plans\SHT-UTIL.dwg, LD-BLOCK 6104, 12/4/2011 2:08:21 PM, pdeighan, 1:1

P:\Codproj\030810\Dwg\BLOCK 6005, Lot 10\10-Amended Site Plans\SHT-UTIL.dwg 12/04/11 02:08:22PM, pdeighan, LAYOUT:LD-BLOCK 6104

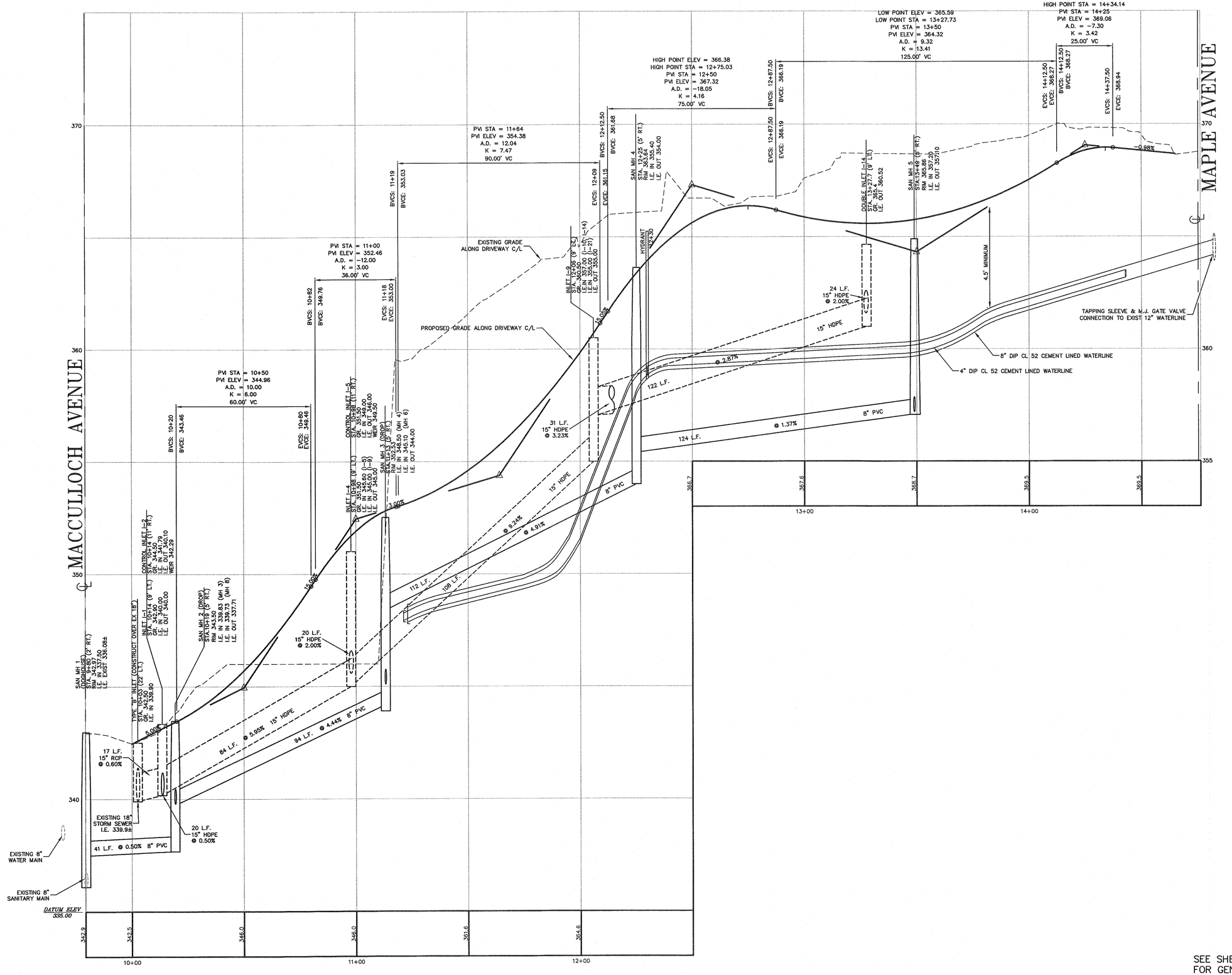

PROFILE: C.L. PROPOSED MAIN ACCESS DRIVE

SEE SHEET 2 OF THIS SET FOR GENERAL NOTES AND REFERENCES.

THESE PLANS ARE FINAL FOR SANITARY SEWER DESIGN

SCALE: 1"=20' HORIZ., 1"=2' VERT.

0 2 4 8 ft.
0 20 40 80 ft.

REVISIONS	
6	
5	
4	
3	
2	
1	

DATE: 12/3/11 CHKD.
PROJ.: 030810.10
SCALE: 1"= 20H, 1"= 2V

THIS DRAWING AND THE INFORMATION CONTAINED HEREIN IS AUTHORIZED FOR USE ONLY BY THE PERSON OR ENTITY FOR WHOM THE WORK WAS CONTRACTED OR TO WHOM IT IS CERTIFIED. ANY OTHER USE OR REPRODUCTION IS PROHIBITED WITHOUT THE WRITTEN CONSENT OF OMLAND ENGINEERING ASSOCIATES, INC. ALL RIGHTS RESERVED.

OMLAND ENGINEERING ASSOCIATES, INC.
Cedar Knolls, New Jersey 07927
Phone: 973-359-8400
FAX: 973-359-8455
E-mail: eea@omland.com
NJ Certificate of Authorization No. 24GA28043700
STANLEY T. OMLAND, JR., P.E., P.L.S., P.P. Licensed Professional Engineer, Lic. No. 24GE02728200
STANLEY T. OMLAND, JR., P.E., P.L.S., P.P. Licensed Professional Engineer, Lic. No. 24GS02728200

AMENDED PRELIMINARY AND FINAL SITE PLANS FOR
EPSTEINS: MAPLE AVENUE TOWNHOMES
DRIVEWAY & SANITARY SEWER PROFILES
BLOCK 6005, LOT 10
TOWN OF MORRISTOWN, MORRIS COUNTY, NEW JERSEY

SHEET No. 7 OF 14

XREFS: SITE-M-Amended.dwg
TITLEMASTER-M-Amended.dwg
XR-REV-05-07-08.dwg

P:\Codpro\030810\Dwg\BLOCK 6005, Lot 10\10-Amended Site Plans\SHT-PROFILES.dwg 12/04/11 02:16:31PM, pdelghan, LAYOUT:PROFILES

P:\Codpro\030810\Dwg\BLOCK 6005, Lot 10\10-Amended Site Plans\SHT-PROFILES.dwg Profiles, 12/4/2011 2:16:32 PM, pdelghan, 1:1

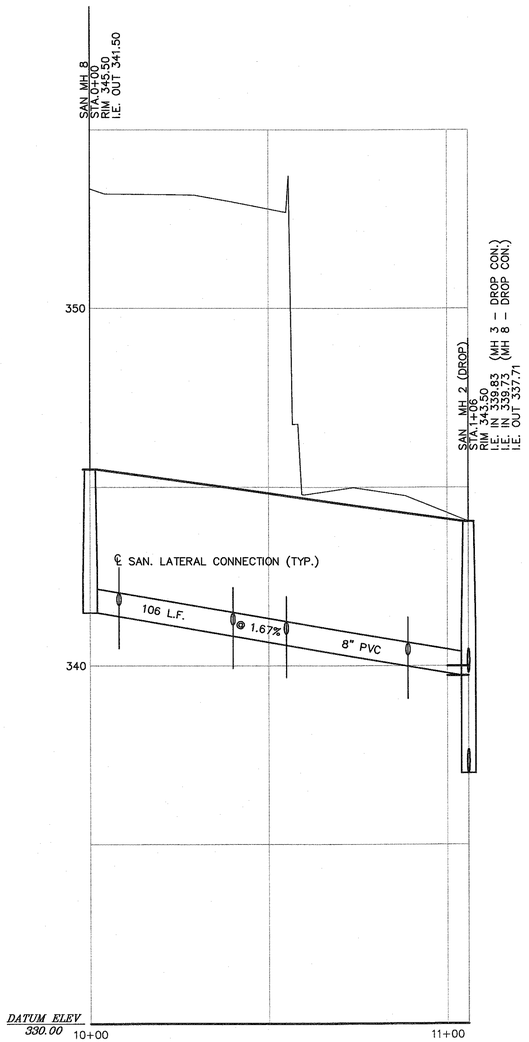

SANITARY SEWER MH 8 – MH 2

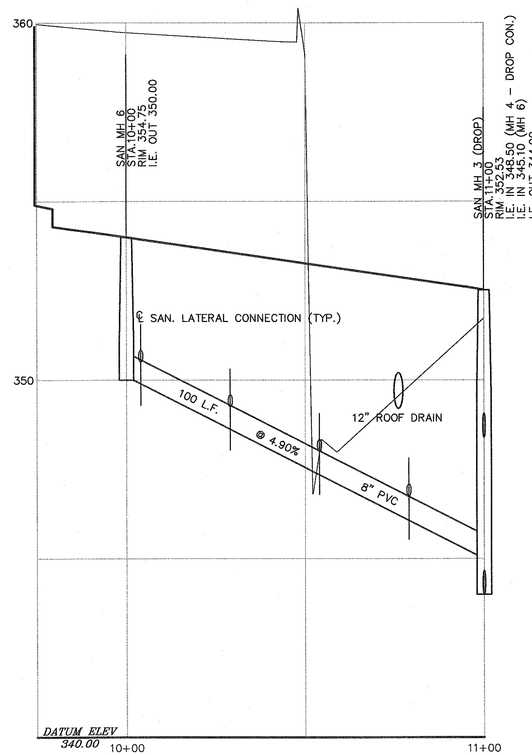

SANITARY SEWER MH 6 – MH 3

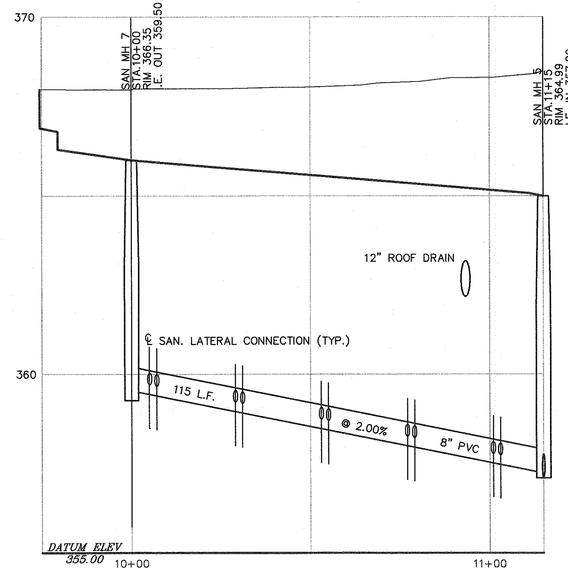

SANITARY SEWER MH 7 – MH 5

THESE PLANS ARE FINAL FOR SANITARY SEWER DESIGN

SCALE: 1"=20' HORIZ., 1"=2' VERT.

0 2 4 8 ft.
0 20 40 80 ft.

REVISIONS	
6	
5	
4	
3	
2	
1	

DATE: 12/3/11 CH'KD.
PROJ.: 030810.10
SCALE: 1"= 20'H, 1"= 2'V

COPYRIGHT © 2011 OMLAND ENGINEERING ASSOCIATES, INC.
COMPLETED PLANS IS AUTHORIZED FOR USE ONLY WITH THE PROJECT AND SITE IDENTIFIED ON THIS DRAWING. ANY OTHER USE WILL BE CONSIDERED UNAUTHORIZED USE OR REUSE UPON FOR ANY OTHER PURPOSE WITHOUT WRITTEN AUTHORITY OF OMLAND ENGINEERING ASSOCIATES, ENGINEERING ASSOCIATES, INC. ALL

OMLAND
ENGINEERING ASSOCIATES, INC.
54 Horsehill Road
Cedar Knolls, New Jersey 07927
Phone: 973-359-8400
FAX: 973-359-8455
E-mail: oea@omland.com
NJ Certificate of Authorization No. 24GA28043700
STANLEY T. OMLAND, P.E., Professional Engineer Lic. 24GE02728200
DAVID R. DOCK, Professional Land Surveyor Lic. 24GS03728300

AMENDED PRELIMINARY AND FINAL SITE PLANS FOR
EPSTEINS: MAPLE AVENUE TOWNHOMES
DRIVEWAY &
SANITARY SEWER PROFILES
BLOCK 6005, LOT 10
TOWN OF MORRISTOWN, MORRIS COUNTY, NEW JERSEY

SHEET No. 8 OF 14

XREFS: SITE-M-Amended.dwg
TITLEMASTER-Amended.dwg
XR-REV-03-07-08.dwg

P:\Codpro\030810\Dwg\BLOCK 6005, Lot 10\10-Amended Site Plans\SHT-PROFILES.dwg 12/04/11 03:00:39PM, pdeighan, LAYOUT:PROFILES (2)

P:\Codpro\030810\Dwg\BLOCK 6005, Lot 10\10-Amended Site Plans\SHT-PROFILES.dwg, Profiles (2), 12/4/2011 3:00:27 PM, pdeighan, 1:1

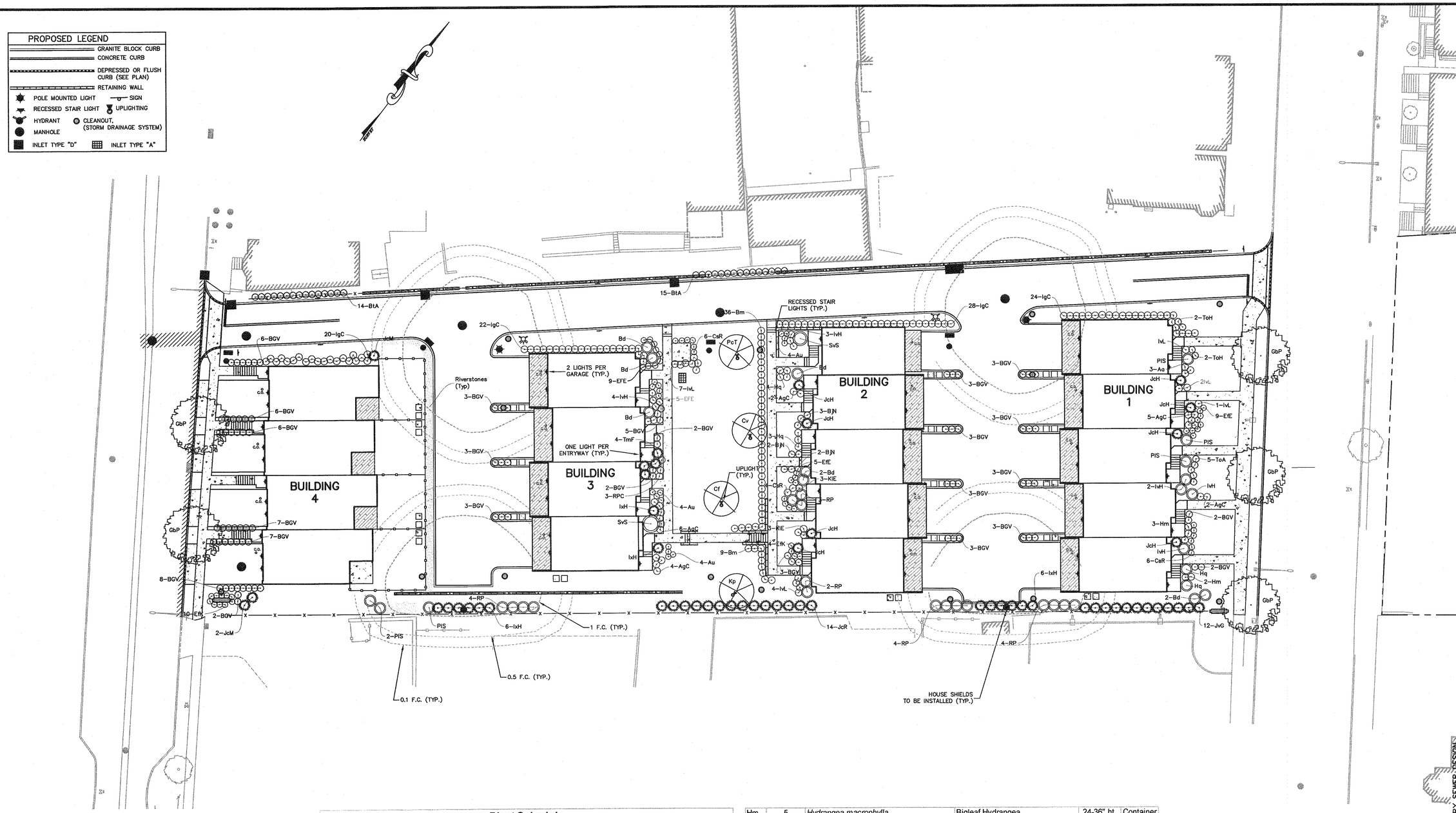

Plant Schedule

Key	Qty	Botanical Name	Common Name	Size	Root
Trees					
Cv	1	*Chinonathus virginicas*	White Fringetree	2-2.5" cal.	B&B
Cf	1	*Cornus florida*	Flowering Dogwood	2-2.5" cal.	B&B
GbP	5	*Ginkgo biloba 'Princeton Sentry'*	Princeton Sentry Maidenhair Tree	2.5-3" cal.	B&B
Kp	1	*Koelreuteria paniculata*	Golden Raintree	2-2.5" cal.	B&B
PcT	1	*Prunus cerasifera 'Thundercloud'*	Purple-Leaf Plum	2-2.5" cal.	B&B
	9				
Shrubs					
AgC	19	*Abelia x grandiflora 'Compacta'*	Compact Glossy Abelia	18-24" ht.	Container
Au	12	*Arctostaphylos uva-ursi*	Kinnikinick	10-12" dia.	Container
Aa	3	*Aronia arbutifolia*	Red Chokeberry	24-36" ht.	B&B
BjN	7	*Berberis julianae 'Nana'*	Dwarf Wintergreen Barberry	24-30" ht.	Container
BtA	31	*Berberis thunbergii atropurpurea*	Crimson Pigmy Barberry	18-24" ht.	Container
Bd	8	*Buddleia davidii*	Butterfly Bush	30-36" ht.	Container
Bm	45	*Buxus microphylla*	Common Boxwood	18-24" ht.	Container
BGV	79	*Buxus microphylla 'Green Velvet'*	Green Velvet Boxwood	24-30" ht.	Container
CsR	16	*Cotoneaster salicifolia 'Repandens'*	Willowleaf Cotoneaster	18-24" dia.	Container
EfE	28	*Euonymus fortunei 'Emrald-n-Gold'*	Winter Creeper Euonumus	12-18" ht.	Container
EfK	14	*Euonymus fortunei 'Kewenisis'*	Winter Creeper Euonumus	12-18" ht.	Container
Hm	5	*Hydrangea macrophylla*	Bigleaf Hydrangea	24-36" ht.	Container
Hq	9	*Hydrangea quercifolia*	Oakleaf Hydrangea	18-24" ht.	Container
IgC	94	*Ilex glabra 'Compacta'*	Compact Inkberry	18-24" ht.	Container
IxH	14	*Ilex x verticillata 'Winter Red'*	Winter Red Holly	4-5' ht.	B&B
IvH	11	*Itea virginica 'Henry's Garnet'*	Henry's Garnet Sweetspire	18-24" ht.	Container
IvL	15	*Itea virginica 'Little Henry'*	Little Henry Sweetspire	30-36" ht.	Container
JcR	14	*Juniperis chinensis 'Robusta Green'*	Robusta Green Chinese Juniper	6-7' ht.	B&B
JcH	8	*Juniperus chinensis 'Hetzii Columnaris'*	Chinese Juniper	4-5' ht.	B&B
JcM	3	*Juniperus chinensis 'Mountbatten'*	Mountbatten Juniper	6-7' ht.	B&B
JvG	12	*Juniperus virginiana 'Grey Owl'*	Grey Owl Juniper	30-36" ht.	Container
KlE	6	*Kalmia latifolia 'Elf'*	Elf Mountain Laurel	18-24" ht.	Container
PIS	6	*Prunus laurocerasus 'Schipkanensis'*	Skip Laurel	30-36" ht.	Container
RP	17	*Rhododendron 'PJM'*	PJM Rhododendron	24-30" ht.	B&B
RPC	3	*Rhododendron PJM 'Compactum'*	Compact PJM Rhododendron	18-24" ht.	B&B
SvS	2	*Syringa vulgaris 'Sensation'*	Sensation Lilac	4-5' ht.	Container
TmF	4	*Taxus x media 'Flushing'*	Flushing Yew	30-36" ht.	Container
ToH	4	*Thuja occidentalis 'Hetz Midget'*	Hetz Midget Arborvite	18-24" ht.	Container
ToA	5	*Thuja oriantalis 'Aura'*	Golden Biota Arborvitae	18-24" ht.	Container
	489				

NOTE: ADDITIONAL MAXIMUM 100 WATT INCANDESCENT LIGHTS TO BE PROVIDED, ONE EACH SIDE OF GARAGES, ONE AT FRONT DOORS, AND UPLIGHTING OF TREES AT COURTYARD AND WALKWAYS.

SEE SHEET 2 OF THIS SET FOR GENERAL NOTES AND REFERENCES.

THESE PLANS ARE FINAL FOR SANITARY SEWER DESIGN

REVISIONS	
6	
5	
4	
3	
2	
1	

DATE: 12/3/11 CHKD.
PROJ.: 030810
SCALE: 1"= 20'

THIS SERVICE WAS AUTHORIZED FOR USE ONLY IN ITS ENTIRETY AS WRITTEN BY OMLAND ENGINEERING ASSOCIATES. IT IS COPYRIGHTED, THIS DOCUMENT MAY NOT BE USED, OR ALTERED IN ANY WAY, FOR ANY OTHER PROJECT WITHOUT THE EXPRESS WRITTEN CONSENT OF OMLAND ENGINEERING ASSOCIATES. © 2011 OMLAND ENGINEERING ASSOCIATES, INC. ALL RIGHTS RESERVED.

OMLAND
ENGINEERING ASSOCIATES, INC.
54 Horsehill Road
Cedar Knolls, New Jersey 07927
Phone: 973-539-8450
FAX: 973-539-9455
E-mail: oea@omland.com
N.J. Certificate of Authorization No. 24GA28043700
STANLEY T. OMLAND, N.J. Professional Engineer, Lic. 24GE02393600
WILLIAM H. HAMILTON, N.J. Licensed Land Surveyor, Professional L.S. License No. 24GS03613400

AMENDED PRELIMINARY AND FINAL SITE PLANS FOR
EPSTEINS: MAPLE AVENUE TOWNHOMES
LANDSCAPING AND LIGHTING PLAN
BLOCK 6005, LOT 10
TOWN OF MORRISTOWN, MORRIS COUNTY, NEW JERSEY

SHEET No. 9 OF 14

XREFS: SITE-XF-Amended.dwg
TITLEMASTER-Amended.dwg

P:\Cadpro\030810\Dwg\BLOCK 6005, Lot 10\10-Amended Site Plans\SHT-LL.dwg, LD-BLOCK 6104, 12/4/2011 3:03:28 PM, pdeighan, 1:1

P:\Cadpro\030810\Dwg\BLOCK 6005, Lot 10\10-Amended Site Plans\SHT-LL.dwg 12/04/11 03:03:30PM, pdeighan, LAYOUT:LD-BLOCK 6104

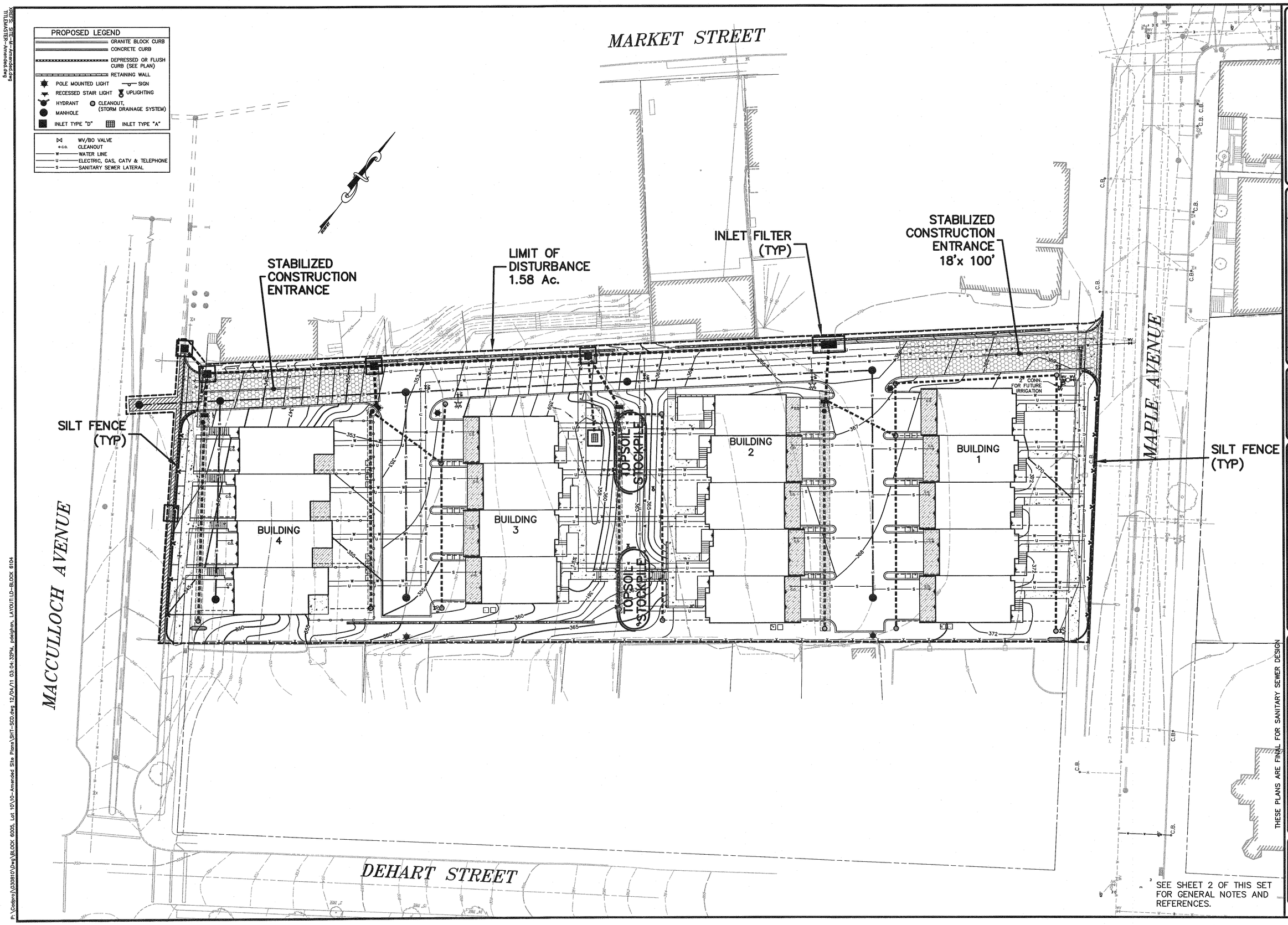

SEE SHEET 2 OF THIS SET FOR GENERAL NOTES AND REFERENCES.

THESE PLANS ARE FINAL FOR SANITARY SEWER DESIGN

REVISIONS	
6	
5	
4	
3	
2	
1	
9	
8	
7	

DATE: 12/3/11
PROJ.: 030810
SCALE: 1" = 20'
CHKD.

THIS DRAWING IS AN INSTRUMENT OF SERVICE AND IS ACCEPTED FOR USE ONLY IN THE PROJECT IN WHICH IT IS CERTIFIED. REPRODUCTIONS, NOT BEARING THE ORIGINAL SIGNATURE OF OMLAND ENGINEERING ASSOCIATES, INC. ARE NOT TO BE REPRODUCED OR PUBLISHED WITHOUT THE WRITTEN PERMISSION OF OMLAND ENGINEERING ASSOCIATES, INC. ALL RIGHTS ARE RESERVED.

OMLAND
ENGINEERING ASSOCIATES, INC.
54 Horsehill Road
Cedar Knolls, New Jersey 07927
Phone: 973-359-8455
FAX: 973-359-8455
E-mail: oea@omland.com
NJ Certificate of Authorization No. 24GA28043700
STANLEY T. OMLAND, P.E., Professional Engineer Lic. No. 24GE02098600
DAVID R. DIDOK, N.J. Professional Land Surveyor Lic. No. 24GS03572600

AMENDED PRELIMINARY AND FINAL SITE PLANS FOR
EPSTEINS: MAPLE AVENUE TOWNHOMES
SOIL EROSION AND SEDIMENT CONTROL PLAN
BLOCK 6005, LOT 10
TOWN OF MORRISTOWN, MORRIS COUNTY, NEW JERSEY

SHEET No. 10 OF 14

XREFS: SITE-M-Amended.dwg
TITLEMASTER-Amended.dwg
P:\Cadpro\030810\Dwg\BLOCK 6005, Lot 10\10-Amended Site Plans\SHT-SCD.dwg, LD-BLOCK 6104, 12/4/2011 3:04:30 PM, pdeighton, 1:1
P:\Cadpro\030810\Dwg\BLOCK 6005, Lot 10\10-Amended Site Plans\SHT-SCD.dwg 12/04/11 03:04:32PM, pdeighton, LAYOUT:LD-BLOCK 6104

SEE SHEET 2 OF THIS SET FOR GENERAL NOTES AND REFERENCES.

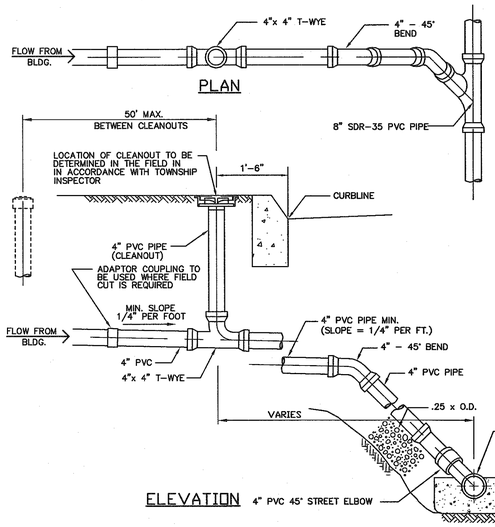

NOTES:
1. ALL COUPLINGS, PLUGS, SOIL PIPES & CAPS TO BE STANDARD FOR TYPE OF PIPE USED, INSTALLATION TO BE WATERTIGHT.
2. CLEANOUTS & INSPECTION TEES ARE TO BE LOCATED 1'-6" FROM CURB WHERE APPLICABLE.
3. BUILDING CONNECTIONS ARE TO BE 4" P.V.C.
4. ALL PLUG THREADS SHALL BE GREASED AT TIME OF INSTALLATION.
5. POLYVINYL CHLORIDE PIPE AND FITTINGS FOR HOUSE LATERALS SHALL CONFORM TO A.S.T.M. D-3034.
6. PROVIDE ADEQUATE PROTECTION FOR SEWER DURING INSTALLATION OF BUILDING CONNECTION.

BUILDING SEWER CONNECTION

N.T.S.

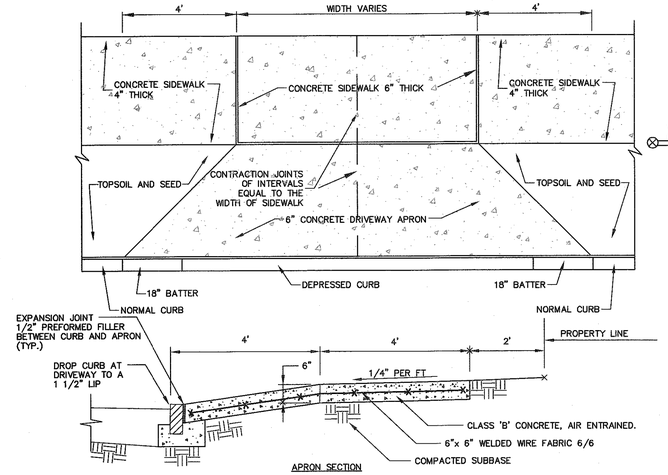

DETAIL OF STANDARD CONCRETE APRON

N.T.S

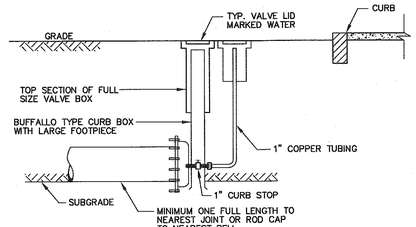

TYPICAL DEAD END BLOWOFF INSTALLATION

N.T.S.

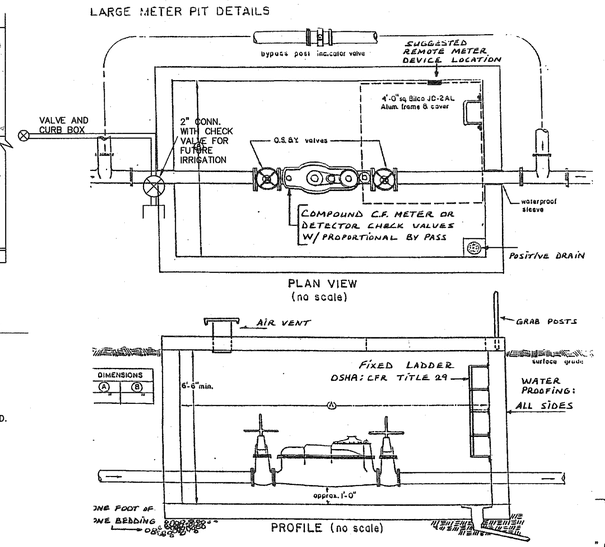

WATER METER PIT DETAIL

N.T.S.

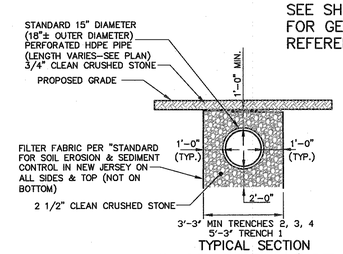

SUBSURFACE RECHARGE FACILITY

N.T.S.

NOTE:
1. ALL PIPING SHALL BE PERFORATED ADS N-12 WITH COMPATABLE PIPE COMPONENTS AS MANUFACTURED BY ADVANCED DRAINAGE SYSTEMS, INC. INSTALLATION SHALL BE IN ACCORDANCE WITH MANUFACTURER'S RECOMMENDATIONS AND PROVIDE FOR HS-20 LOADING. PROVISIONS SHALL BE MADE TO PREVENT FLOATATION DURING CONSTRUCTION.

2. THE CONTRACTOR SHALL SUBMIT SHOP DRAWINGS OF THE INFILTRATION FACILITIES TO OMLAND ENGINEERING ASSOCIATES FOR REVIEW AND APPROVAL.

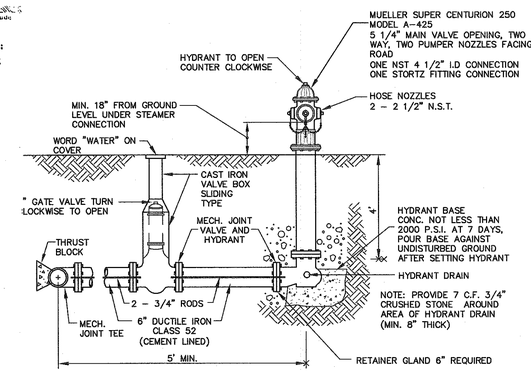

NOTES:
1. UNLESS OTHERWISE SPECIFIED - WATER MAIN SHALL BE DUCTILE IRON PIPE CLASS 52 (CEMENT LINED)
2. GATE VALVES SHALL BE MUELLER OR APPROVED EQUAL.
3. HYDRANTS SHALL BE MUELLER.
4. VALVE BOX SHALL BE SLIDING.
5. BONNETS AND CAPS SHALL BE WHITE WITH RED BODY.

HYDRANT INSTALLATION

N.T.S.

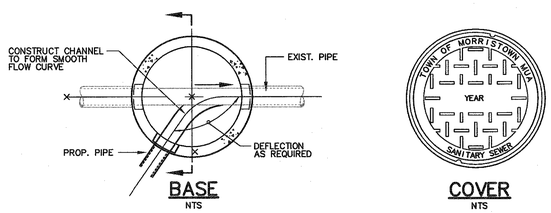

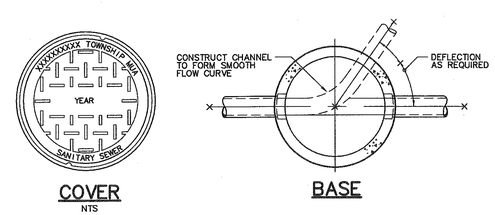

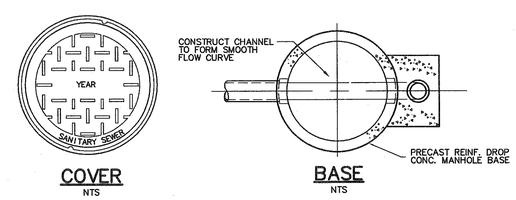

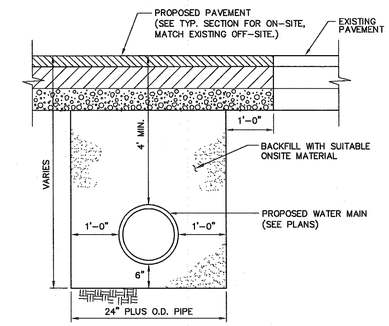

WATER TRENCH

N.T.S.

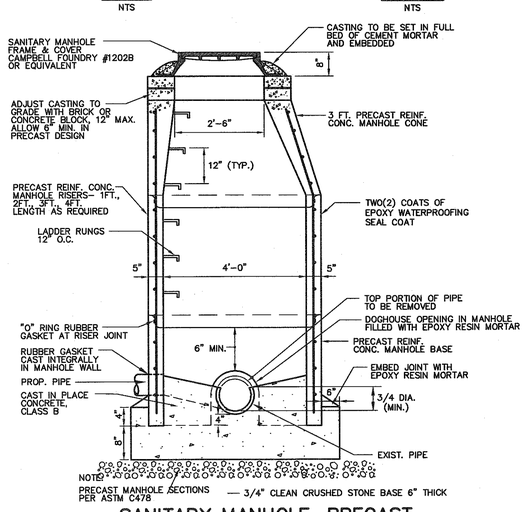

SANITARY MANHOLE, PRECAST

SANITARY MANHOLE ON EXISTING PIPE (DOGHOUSE)

N.T.S.

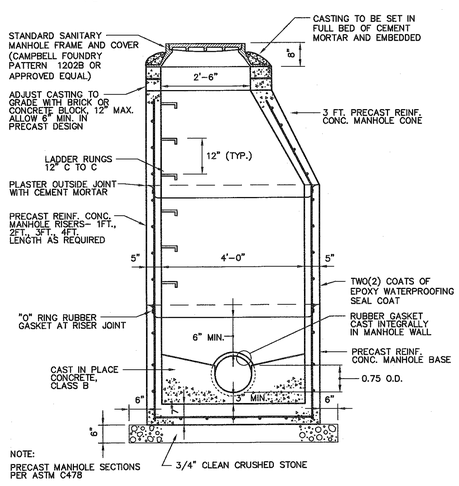

MANHOLES, PRECAST (SANITARY)

SCALE: N.T.S.

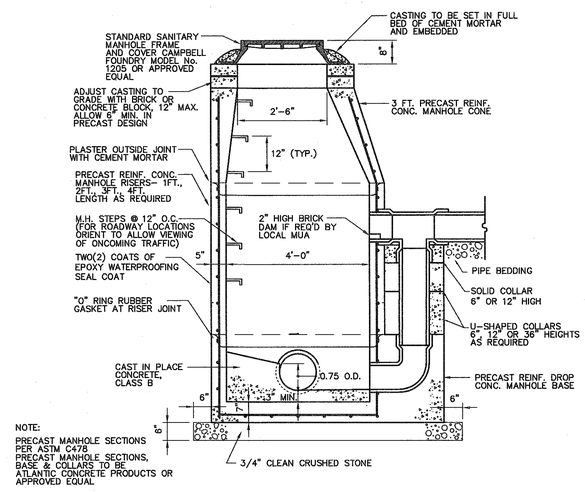

DROP MANHOLES, PRECAST (SANITARY)

N.T.S.

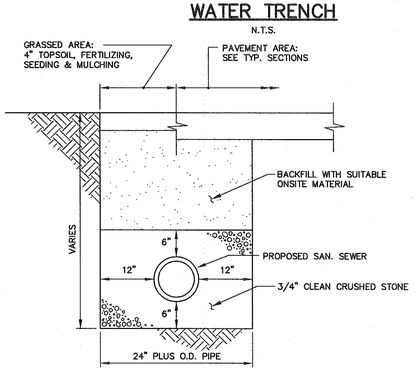

SANITARY SEWER TRENCH DETAIL

N.T.S.

THESE PLANS ARE FINAL FOR SANITARY SEWER DESIGN

REVISIONS							
6	5	4	3	2	1	8	7

DATE: 12/3/11 CHKD.
PROJ.: 030810
SCALE: AS SHOWN

THIS DRAWING AND ALL INFORMATION CONTAINED HEREIN IS AUTHORED OR PRODUCED BY OMLAND ENGINEERING ASSOCIATES. WORK, NOT CONTRACTED OR TO WHICH IT HAS NOT BEEN PAID IN FULL, MAY BE LOCKED, RETAINED, DISCLOSED, DISTRIBUTED OR USED BY ANY PERSON FOR ANY PURPOSE WITHOUT THE WRITTEN CONSENT OF OMLAND ENGINEERING ASSOCIATES. © NJC COPYRIGHT 2011 OMLAND ENGINEERING ASSOCIATES, INC. ALL RIGHTS RESERVED.

54 Horsehill Road
Cedar Knolls, New Jersey 07927
Phone: 973-359-8400
FAX: 973-359-8455
E-mail: oea@omland.com
NJ Certificate of Authorization No. 24GA28043700
OMLAND
ENGINEERING ASSOCIATES, INC.
STANLEY T. OMLAND, NJ Professional Engineer Lic. 24GE02456600
DAVID T. DUGAN, NJ Professional Engineer Lic. 24GE02728500

AMENDED PRELIMINARY AND FINAL SITE PLANS FOR
EPSTEINS: MAPLE AVENUE TOWNHOMES
CONSTRUCTION DETAILS
BLOCK 6005, LOT 10
TOWN OF MORRISTOWN, MORRIS COUNTY, NEW JERSEY

SHEET No. 11 OF 14

XREFS: TITLEMASTER-Amended.dwg
XR-DTL-B-Control-Inlet.dwg
XR-REV-05-07-08.dwg
P:\Codpro\030810\Dwg\BLOCK 6005, Lot 10\10-Amended Site Plans\Dtl-M-Amended.dwg, 12/04/11 02:46:54PM, pdeighan, LAYOUT:1 OF 4
P:\Codpro\030810\Dwg\BLOCK 6005, Lot 10\10-Amended Site Plans\DtL-M-Amended.dwg, 1 OF 4, 12/4/2011 2:46:52 PM, pdeighan, 1:1

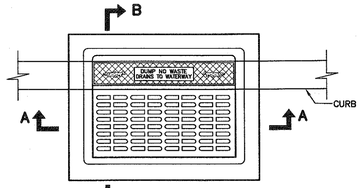

PLAN

THIS INLET MAY BE CONSTRUCTED OF BRICK, CONCRETE OR CONCRETE BLOCK. IF BRICK OR CONCRETE BLOCK IS USED THE BOTTOM SHALL BE AS SHOWN FOR CONCRETE.

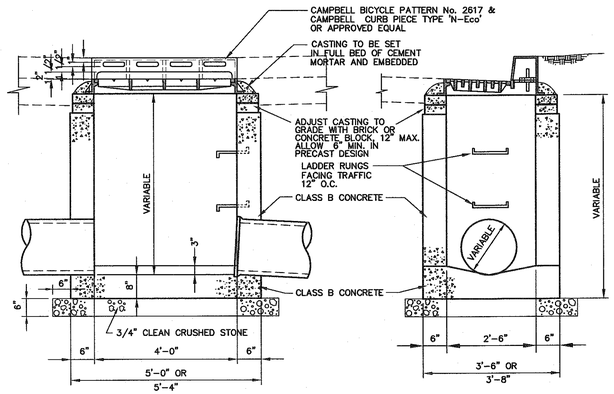

SECTION A–A SECTION B–B

INLET TYPE "D"

SCALE: 1/2" = 1'-0"

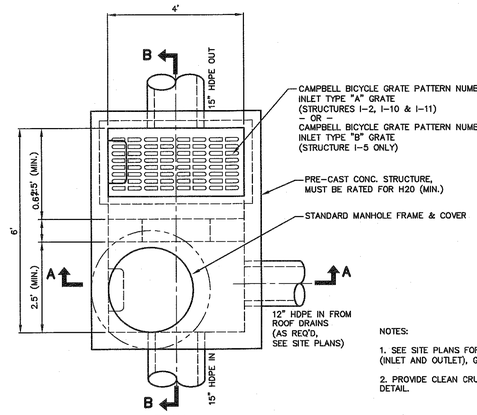

PLAN

NOTES:

1. SEE SITE PLANS FOR PIPE INVERTS (INLET AND OUTLET), PIPE ORIENTATIONS (INLET AND OUTLET), GRATE ELEVATIONS AND RIM ELEVATIONS.

2. PROVIDE CLEAN CRUSHED STONE FOOTING SIMILAR TO INLET TYPE "B" DETAIL.

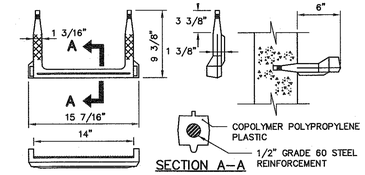

SECTION A–A

FOR ROADWAY LOCATIONS STEPS SHALL BE ORIENTED TO ALLOW VIEWING OF ONCOMING TRAFFIC WHEN EXITING STRUCTURE

COPOLYMER POLYPROPYLENE PLASTIC LADDER RUNG

N.T.S.

SEE SHEET 2 OF THIS SET FOR GENERAL NOTES AND REFERENCES.

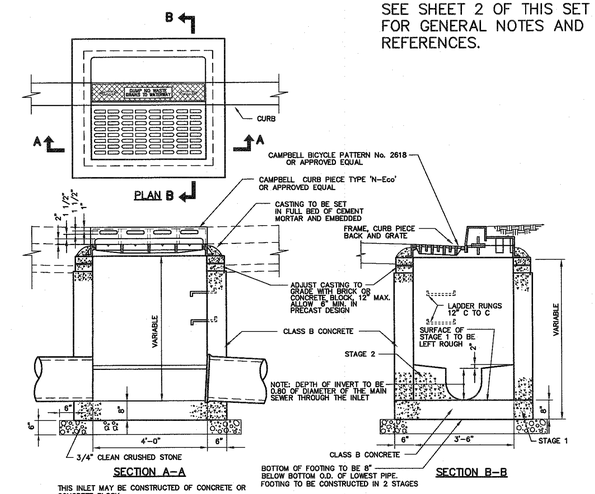

SECTION A–A SECTION B–B

THIS INLET MAY BE CONSTRUCTED OF CONCRETE OR CONCRETE BLOCK.

INLET TYPE "B" WITH C.I. CURB PIECE–BACK–FRAME AND GRATE

N.T.S.

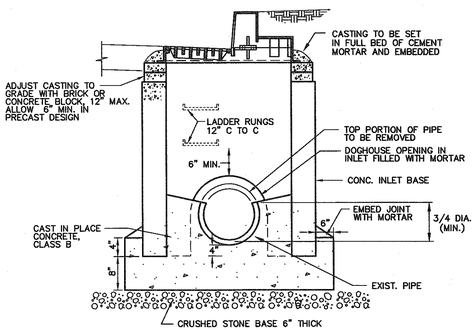

INLET CONSTRUCTED ON EXISTING PIPE

SIMILIAR TO INLET TYPE 'B' EXCEPT AS SHOWN

N.T.S.

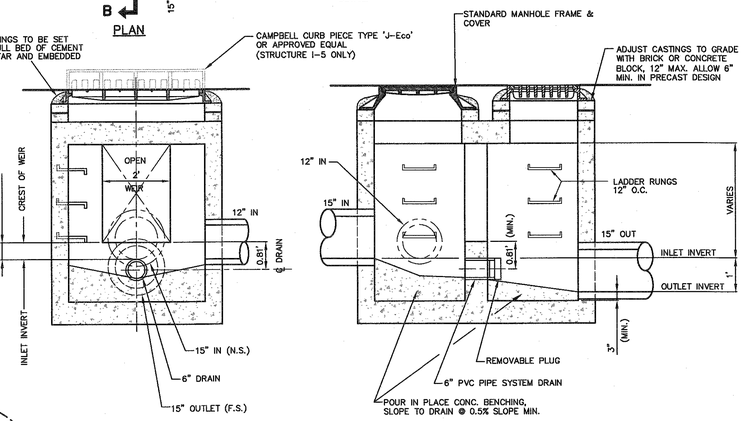

SECTION A–A SECTION B–B

CONTROL INLET DETAIL

N.T.S.

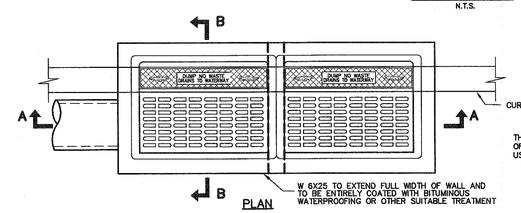

PLAN

THIS INLET MAY BE CONSTRUCTED OF BRICK, CONCRETE OR CONCRETE BLOCK. IF BRICK OR CONCRETE BLOCK IS USED THE BOTTOM SHALL BE AS SHOWN FOR CONCRETE.

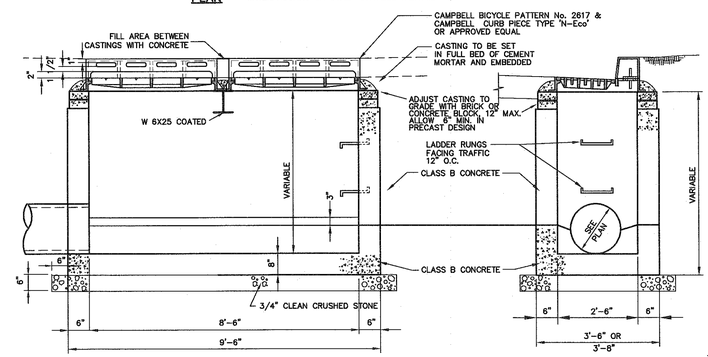

SECTION A–A SECTION B–B

DOUBLE INLET TYPE "D"

N.T.S.

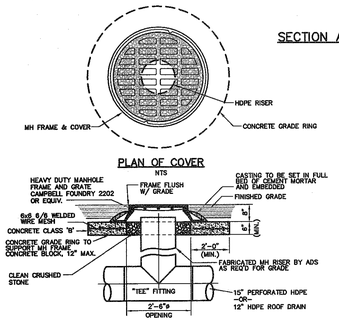

PLAN OF COVER NTS

SECTION NTS

STORM DRAINAGE SYSTEM CLEANOUT W/ REINFORCED CONCRETE RING

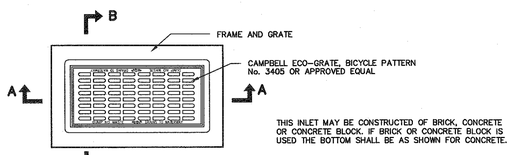

PLAN

THIS INLET MAY BE CONSTRUCTED OF BRICK, CONCRETE OR CONCRETE BLOCK. IF BRICK OR CONCRETE BLOCK IS USED THE BOTTOM SHALL BE AS SHOWN FOR CONCRETE.

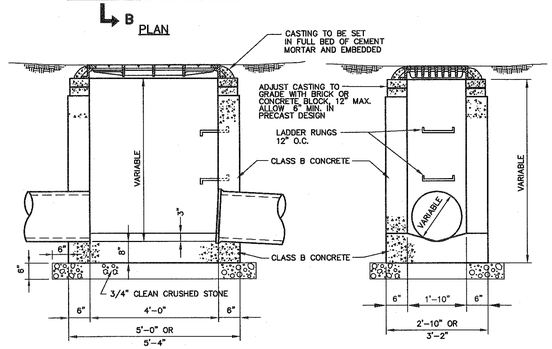

SECTION A–A INLET TYPE "A" SECTION B–B

SCALE: 1/2" = 1'-0"

INFILTRATION FACILITY NOTES

1. ALL INFILTRATION FACILITIES ARE AT LEAST 10' DOWNGRADIENT OF ANY FOUNDATION, AT LEAST 100' FROM A DRINKING WATER SUPPLY WELL, AN 100' UPGRADIENT FROM ANY FOUNDATIONS OR APPROPRIATE YARD SETBACK WHERE NO FOUNDATION EXISTS ON THE DOWNGRADIENT PROPERTY LINE WITH A MINIMUM BUFFER OF 25' FROM THE EDGE OF THE INFILTRATION FACILITY TO THE PROPERTY LINE.
2. INFILTRATION AREAS SHALL HAVE ALL VEGETATION, TOPSOIL, SILT, AND CLAY REMOVED AND SHALL HAVE A PERMEABLE SOIL STRATA EXPOSED PRIOR TO BED INSTALLATION. AREA MUST BE INSPECTED PRIOR TO FILL OR STONE PLACEMENT BY OMLAND ENGINEERING ASSOCIATES, INC. THE INFILTRATION RATE SHALL BE VERIFIED AT EACH INFILTRATION FACILITY USING THE PROCEDURES IN N.J.A.C. 7:9A–6.4 –PERCOLATION TEST. WHERE NATIVE MATERIALS FAIL TO PROVIDE 0.5 IN/HR MINIMUM INFILTRATION, MITIGATIVE MEASURES, SUCH AS SOIL REPLACEMENT, SHALL BE IMPLEMENTED. A SECOND INSPECTION IS REQUIRED AFTER INSTALLATION OF THE SYSTEM BUT PRIOR TO BACKFILLING. CONTRACTOR TO COORDINATE ALL INSPECTIONS (IF REQUIRED) BY GIVING FORTY–EIGHT HOURS NOTICE. OMLAND ENGINEERING INC. IS TO BE CONTACTED TWENTY–FOUR HOURS PRIOR TO INSPECTION AT (973) 359–8400.
3. OMLAND ENGINEERING SHALL BE NOTIFIED IF ANY CLAY LENSES ARE ENCOUNTERED DURING EXCAVATION FOR THE INFILTRATION FACILITIES SO A DETERMINATION MAY BE MADE REGARDING THE RECONFIGURATION OF THE FACILITY OR THE REPLACEMENT OF THE SOIL IN ORDER TO PROVIDE FOR THE VOID RATIO (STORAGE) AND HYDRAULIC CHARACTERISTICS OF THE INFILTRATION FACILITY.
4. MATERIAL EXCAVATED FROM WITHIN THE DISPOSAL BED AREA MAY BE USED AS FILL AROUND THE BED AREA FOR DEPTHS UNDER 2'–0'.
5. NO HEAVY MACHINERY PERMITTED ON THE INFILTRATION AREAS.
6. CLEAN STONE SHALL BE COVERED WITH FILTER FABRIC PRIOR TO BACKFILLING BED.
7. FILL MATERIAL UTILIZED WITHIN AREAS WHERE INFILTRATION FACILITIES ARE IN FILL SHALL MEET THE FOLLOWING SPECIFICATIONS:
   A: COARSE FRAGMENT CONTENT LESS THAN 15% BY VOLUME OR LESS THAN 25% BY WEIGHT
   B: TEXTURAL ANALYSIS (COMPOSITION, BY WEIGHT, OF SIZE FRACTION PASSING THE TWO MILIMETER SIEVE): FROM 85 TO 95% SAND, FROM 5 TO 15% SILT PLUS CLAY, MINIMUM 2% CLAY; AND
   C: PERMEABILITY FROM 2 TO 20 INCHES PER HOUR; OR PERCOLATION RATE FROM 3 TO 30 MINUTES PER INCH.
   D: THE DESIGN ENGINEER SHALL INSPECT THE SELECTION AND COMPACTION OF FILL, AND THE PREPARATION OF INFILTRATION SURFACES, AND AS NECESSARY, SOIL REPLACEMENT TO ACHIEVE THE INTENDED PURPOSES OF THE FACILITIES.
8. COMPACTION OF FILL MATERIAL
   A. FILL MATERIAL SHALL BE SPREAD AND COMPACTED IN LAYERS ONE FOOT OR LESS IN THICKNESS.
   B. COMPACTION MAY BE ACCOMPLISHED BY TAMPERING, ROLLING, OR DRIVING OVER THE FILLED AREA IN A CONTROLLED PATTERN USING TRACKED OR RUBBER–TIRED VEHICLES.
   C. WHEN HEAVY EXCAVATING EQUIPMENT IS OPERATED WITHIN THE EXCAVATION, THIS EQUIPMENT SHALL NOT BE DRIVEN DIRECTLY ON THE EXPOSED BOTTOM OF THE EXCAVATION. A MINIMUM OF ONE FOOT OF FILL MATERIAL SHALL BE MAINTAINED BELOW THE VEHICLE TRACKS OR WHEELS AT ALL TIMES.
   D. BASED UPON A FINAL INSPECTION, A PROFESSIONAL ENGINEER SHALL CERTIFY THAT COMPACTION OF THE FILL HAS BEEN PERFORMED ADEQUATELY TO PREVENT FAILURE OF ANY COMPONENT OF THE SYSTEM DUE TO SETTLEMENT.

INLET & MANHOLE NOTES

1. CORBELLING OF INLET WALLS WILL BE PERMITTED AT THE RATE OF 1/2" PER 8" OF HEIGHT OF WALL: MAXIMUM CORBEL 6" PER WALL.
2. WHEN THE ITEM MANHOLES, INLETS AND CATCH BASINS, ADDITIONAL DEPTH, IS SCHEDULED IN THE PROPOSAL AND THE DEPTH OF A STRUCTURE EXCEEDS 10' AS MEASURED FROM TOP OF COVER OR GRATE TO INVERT OF DRAINAGE STRUCTURE, THE WALLS OF THE STRUCTURE BELOW A DEPTH OF 8' SHALL BE 12" THICK, AND THE OVERALL HORIZONTAL DIMENSIONS OF FOUNDATIONS SHALL BE INCREASED 12", AND EXCEPT IN ROCK THE DEPTH INCREASED TO 12".
3. EXCEPT FOR CATCH BASINS AND TYPE A INLETS, FOOTINGS AND INVERTS SHALL BE CONSTRUCTED IN TWO STAGES, AND THE BOTTOM OF THE FOOTINGS SHALL BE 8" BELOW THE OUTER WALL OF THE LOWEST PIPE IN INLETS AND 10" IN MANHOLES.
4. LADDER RUNGS OF PRECAST INLETS SHALL BE SPACED A MAXIMUM OF 18".
5. INLET FOUNDATIONS WHICH ARE PRECAST SHALL BE PLACED ON A 6" THICK BED OF COMPACTED COARSE AGGREGATE SIZE No. 57. THE COARSE AGGREGATE SHALL EXTEND 6" BEYOND THE HORIZONTAL LIMITS OF THE INLET FOUNDATION.
6. CASTINGS FOR PRECAST INLETS AND MANHOLES SHALL BE ADJUSTED TO GRADE WITH COURSES OF BRICK, AS REQUIRED, 12" MAXIMUM. 6" MIN. SHALL BE ALLOWED FOR IN PRECAST DESIGN.
7. WHEN THE DEPTH OF A PRECAST INLET EXCEEDS 10' AS MEASURED FROM TOP OF GRATE TO INVERT, THE FOUNDATION SHALL BE INCREASED TO 12". WHEN ROCK IS ENCOUNTERED THE DEPTH OF THE FOUNDATION SHALL NOT BE INCREASED.
8. MINIMUM WALL REINFORCEMENT FOR PRECAST INLETS TYPE A, B, C, E, D–1 AND B MODIFIED.

DEPTH BELOW TOP OF GRATE	HORIZONTAL REINFORCEMENT	VERTICAL REINFORCEMENT	WALL THICKNESS
0' TO 10'–0"	#4 @ 10" C.C.	#4 @ 18" C.C.	6"
10'–1" TO 15'–0"	#4 @ 8" C.C.	#4 @ 18" C.C.	6"
15'–1" TO 20'–0"	#4 @ 6" C.C.	#4 @ 18" C.C.	6"

REINFORCING SHOWN FOR PRECAST INLETS IS THE MINIMUM REQUIRED. ADDITIONAL REINFORCING FOR HANDLING IS THE RESPONSIBILITY OF THE CONTRACTOR.

9. THE ITEM OF RESET HEADS SHALL INCLUDE RAISING OR LOWERING THE HEAD CASTINGS OF INLETS AND CATCH BASINS, OR THE RAISING OF MANHOLE HEAD CASTINGS, FOR A MAXIMUM OF 12". ALL OTHER CHANGES IN POSITION OF HEAD CASTING SHALL BE CONSIDERED AS RECONSTRUCTED MANHOLES OR RECONSTRUCTED INLETS OR CATCH BASINS.
10. WHEN CURB PIECE HEIGHT SPECIFIED IS GREATER THAN CURB FACE HEIGHT, DEPRESS THE GUTTER OF GRATE SO THAT THE TOP OF CURB PIECE IS AT THE SAME ELEVATION AS THE TOP OF CURB.

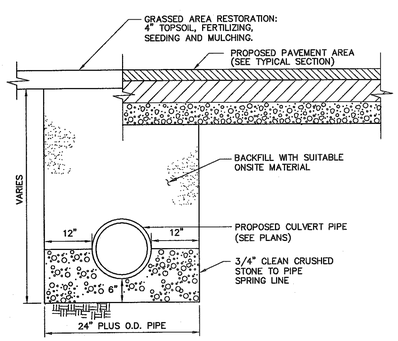

STORM SEWER TRENCH DETAIL

N.T.S.

No.	REVISIONS
6	
5	
4	
3	
2	
1	
9	
8	
7	

DATE: 12/3/11 CHKD.
PROJ.: 030810
SCALE: AS SHOWN

THIS DRAWING IS THE PROPERTY OF OMLAND ENGINEERING ASSOCIATES, INC. CONTAINED HEREIN IS AUTHORED FOR THE PROJECT NAMED HEREON. ANY REPRODUCTION, IN WHOLE OR IN PART, OR VARIATION THEREOF, NOT CONTRACTED FOR TO WHOM IT IS ISSUED, OR ANY USE OF THE INFORMATION CONTAINED HEREIN, DISCLOSED, EXPRESSED OR IMPLIED, IS PROHIBITED WITHOUT THE PRIOR CONSENT OF OMLAND ENGINEERING ASSOCIATES, INC. ALL RIGHTS ARE RESERVED.

54 Horsehill Road
Cedar Knolls, New Jersey 07927
Phone: 973-359-8400
FAX: 973-359-8455
E-mail: oea@omland.com
NJ Certificate of Authorization No. 24GA28043500
OMLAND ENGINEERING ASSOCIATES, INC.
STANLEY D. OMLAND, P.E., Professional Engineer, Lic. 24GE02728500
SANDY L. DUDZINSKI, Professional Land Surveyor, Lic. 24GS03728600

THESE PLANS ARE FINAL FOR SANITARY SEWER DESIGN

AMENDED PRELIMINARY AND FINAL SITE PLANS FOR
EPSTEINS: MAPLE AVENUE TOWNHOMES
BLOCK 6005, LOT 10
TOWN OF MORRISTOWN, MORRIS COUNTY, NEW JERSEY

CONSTRUCTION DETAILS

SHEET No. 12 OF 14

XREFS: TITLEMASTER-Amended.dwg
XR-DTL-B-Control-Inlet.dwg
XR-REV-05-07-08.dwg
P:\Codjno\030810\Dwg\BLOCK 6005, Lot 10\10-Amended Site Plans\DHI-M-Amended.dwg, 12/04/11 02:47:41PM, pdelghan, LAYOUT:2 OF 4
P:\Codjno\030810\Dwg\BLOCK 6005, Lot 10\10-Amended Site Plans\DHI-Amended.dwg, 2 OF 4, 12/4/2011 2:47:39 PM, pdelghan, 1:1

XREFS: TITLEMASTER-Amended.dwg
XR-DTL-Bs-Control-Inlet.dwg
XR-REV-03-07-08.dwg

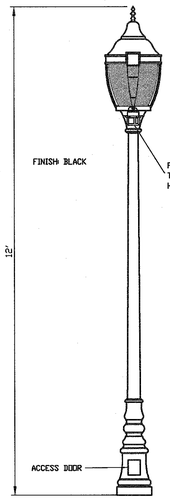

HADCO LIGHTING
FIXTURE: HAGERSTOWN
MODEL No.: V03
LAMP: 150 WATT METAL HALIDE
LUMEN RATING: 16,000
(WITH ASYMMETRIC REFRACTIVE PANELS)
MOUNTING HEIGHT: 12'

Order No. VS03AB4NU(VOLTAGE)

BOLT CIRCLE: 7" DIA.
4 SLOTS 90° APART
BASE: 11" DIA. x 30"H

Hagerstown V03

Specifications

CONSTRUCTION: Sturdy cast aluminum with a spun aluminum roof and decorative trim. The hinged roof opens past 90° and is secured with a captive fastener. A weatherproof ballast housing isolates the ballast from water and heat for longer life. A U.V. stabilized polycarbonate globe fits against a gasketed watertight seal. All fasteners are non-ferrous. The fixture finish is a thermoset polyester powdercoat.

ELECTRICAL: All selected components shall be UL recognized and be an integral part of the fixture. The fixture will carry a UL label and will be suitable for wet locations. Socket will be a mogul or medium base (see ordering guide), nickel-plated screw shell with center contact.

BALLASTS: All ballasts are regulating with power factors better than 90% (HPF). Ballasts shall provide +/- 5% lamp power regulation with +/- 10% input voltage regulation. Ballasts are factory prewired and tested.

EPA: V03 = 1.7

DIMENSIONS: V03 = 37" high x 18 1/4" wide.

WARRANTY: Fixture shall carry a three-year limited warranty.

Features

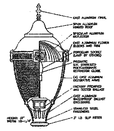

V03
Type V Refractor Globe

HADCO

Optics

HADCO's Hagerstown H.I.D. luminaire combines refractor or roof cut-off optics with a turn-of-the-century style. Combining performance and design the Hagerstown is ideal for street lighting in residential and historic urban settings.

Type V Refractor Globes: Optically designed, injection molded, U.V. stabilized polycarbonate prismatic refractor globe with highly polished internal specular Alzak® reflector. Meets IES Type V criteria.

Asymmetric Refractor Globes: Optically designed, injection molded, U.V. stabilized polycarbonate prismatic refractor globe with highly polished internal specular Alzak® reflector and house-side shield.

Lamping Guide

TYPE	70W	100W	150W	175W
MV		o		o
MH	o	o		o
HPS	o	o	o	

THIS LIGHTING PATTERN REPRESENTS INITIAL ILLUMINATION LEVELS CALCULATED FROM LABORATORY DATA TAKEN UNDER CONTROLLED CONDITIONS IN ACCORDANCE WITH ILLUMINATION ENGINEERING SOCIETY APPROVED METHODS. ACTUAL PERFORMANCE OF ANY MANUFACTURER'S LUMINARE MAY VARY DUE TO VARIATION IN ELECTRICAL VOLTAGE, TOLERANCE IN LAMPS AND OTHER FIELD CONDITIONS.

Hagerstown V03 Photometric Data

IES Classification: Asymmetric refractor globe
Test Report No.: HDC003029
Luminaire: V03
Lamp: 150W HPS
Lumens: 16,000
Pole Height: 12 feet

ISOFOOTCANDLE CHART

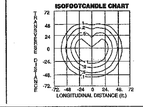

CONVERSION CHARTS FOR ISOLUX

Mtg. Height	10'	11'	12'	13'	14'	15'	16'
Multiplier	1.44	1.19	1.0	.88	.73	.64	.55

Lamp	100W MV	175W MV	70W MH	100W MH	175W MH	70W HPS	100W HPS	150W HPS	175W HPS
Mult.	.27	.54	.20	.40	.81	.17	.34	.59	1.0

LUMEN OUTPUT AND EFFICIENCY

		LUMENS	LAMP %
Downward	Street Side	6211	38.8
	House Side	4132	25.8
	Efficiency	10343	64.6
Upward	Street Side	597	4.3
	House Side	451	2.8
	Efficiency	1138	7.1

COEFFICIENTS OF UTILIZATION

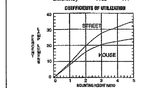

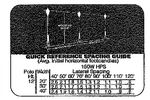

STANDARD LIGHT DETAIL

N.T.S.

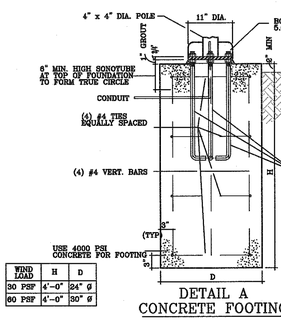

WIND LOAD	H	D
30 PSF	4'-0"	24" ø
60 PSF	4'-0"	30" ø

DETAIL A
CONCRETE FOOTING

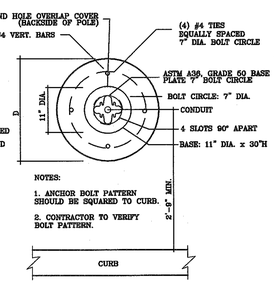

NOTES:
1. ANCHOR BOLT PATTERN SHOULD BE SQUARED TO CURB.
2. CONTRACTOR TO VERIFY BOLT PATTERN.

BASE PLATE
SCALE: 1" = 1'-0"

CONCRETE FOOTING & BASE PLATE DETAILS FOR STANDARD YARD LIGHT

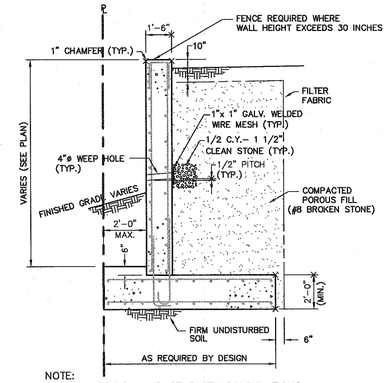

NOTE:
DETAILED DESIGN AND STABILITY CALCULATIONS PREPARED BY A P.E. TO BE PROVIDED TO THE MUNICIPAL ENGINEER PRIOR TO CONSTRUCTION.

TYPICAL SECTION REINFORCED CONCRETE RETAINING WALL

N.T.S.

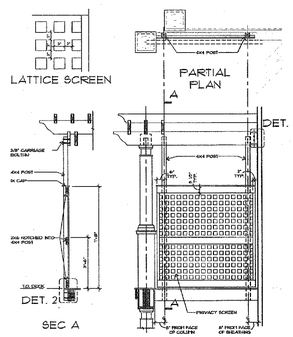

PRIVACY FENCE DETAILS

N.T.S.

GENERAL NOTES:

1. LANDING AREA, APPROACH SIDEWALK TRANSITIONS, AND CURB RAMP SHALL BE KEPT CLEAR OF OBSTRUCTIONS.

2. CURB (DROPPED CURB) CENTERLINE TO BE FLUSH WITH ROADWAY PAVEMENT A MINIMUM OF 4' AT ALL CURB RAMPS, EXCEPT THAT THE DETAIL "D" SHALL BE MINIMUM OF 5'.

3. FOR CURB RAMP TYPE 3, IF A GRASS BUFFER DOES NOT EXIST, SLOPE CURB TO EQUAL SLOPE OF ADJACENT CURB RAMP.

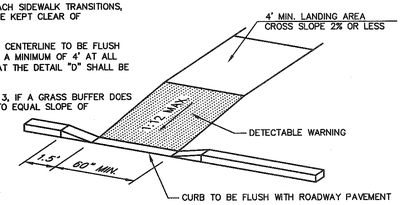

CURB RAMP DETAIL

SIDEWALK PERPENDICULAR TO CURB
N.T.S.

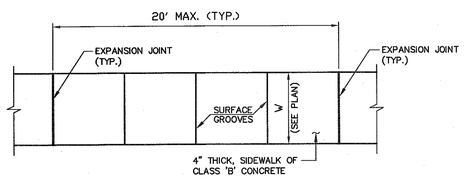

JOINT PLACEMENT DETAIL

N.T.S.

NOTES:
1. SUBBASE SHALL BE COMPACTED TO A FIRM AND EVEN SURFACE TO THE SATISFACTION OF THE ENGINEER.
2. CONCRETE SHALL BE STRUCK OFF WITH A TRANSVERSE TEMPLATE AND FINISHED WITH FLOATS AND STRAIGHTEDGES UNTIL A SMOOTH SURFACE HAS BEEN OBTAINED.
3. THE SURFACE SHALL BE FINISHED WITH A WOODEN FLOAT AND BRUSHED WITH A WET, SOFT-HAIRED BRUSH.
4. ALL EDGES SHALL BE FINISHED AND ROUNDED WITH AN EDGING TOOL HAVING A RADIUS OF 1/4 INCH.
5. PREFORMED EXPANSION JOINT FILLER, 1/4" INCH THICK, SHALL BE FORMED AROUND ALL APPURTENANCES, SUCH AS MANHOLES AND UTILITY POLES, EXTENDING INTO OR THROUGH THE CONCRETE.
6. THE SURFACE OF THE CONCRETE SHALL BE SO FINISHED AS TO DRAIN COMPLETELY AT ALL TIMES.

CONCRETE SIDEWALK

N.T.S.

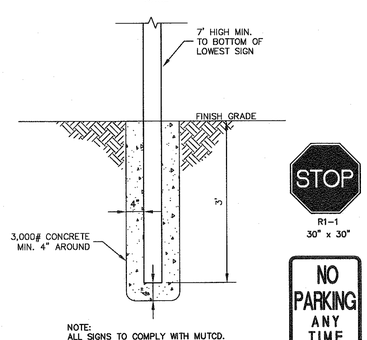

POST DETAIL

TRAFFIC SIGN DETAILS

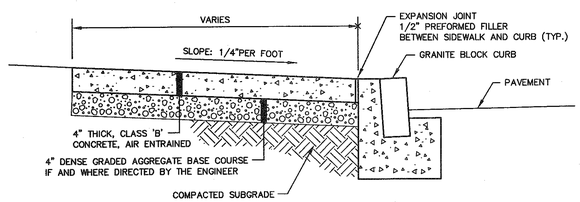

TYPICAL SECTION

CONCRETE SIDEWALK – ABUTTING GRANITE BLOCK CURB

N.T.S.

CHAIN LINK FENCE

1. MATERIALS FOR CHAIN LINK FENCE SHALL CONFORM TO AASHTO M181.
2. CHAIN LINK FABRIC SHALL BE 2" MESH (BLACK) PVC COATED STEEL WOVEN WIRE FABRIC.
   POSTS AND RAILS SHALL BE PVC COATED WELDABLE STEEL PIPE.
   WIRE FABRIC TIES SHALL BE PVC COATED 9 GAUGE ALUMINUM ALLOY.
3. MISCELLANEOUS FITTINGS AND HARDWARE SHALL PVC COATED STEEL WROUGHT OR CAST AS APPROPRIATE FOR THE ARTICLE.
4. CAULK BETWEEN BASE PLATES AND CONCRETE FILLING ALL VOIDS AND ANCHOR BOLT HOLES.

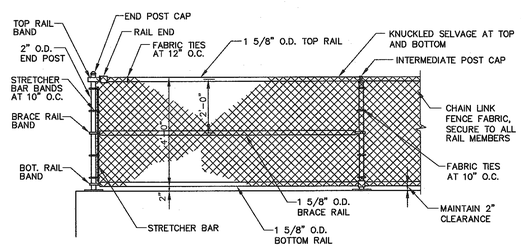

ELEVATION

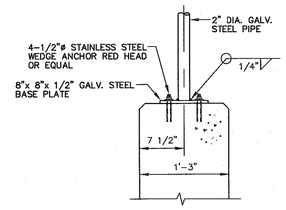

SECTION

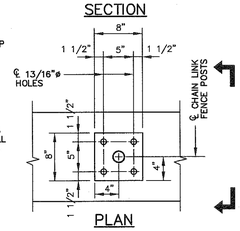

PLAN

BASE PLATE DETAILS

CHAIN LINK FENCE

ATTACHMENT TO WALL
N.T.S.

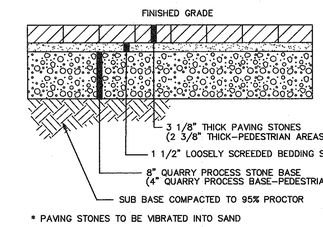

* PAVING STONES TO BE VIBRATED INTO SAND

CONCRETE PAVING STONES

N.T.S.

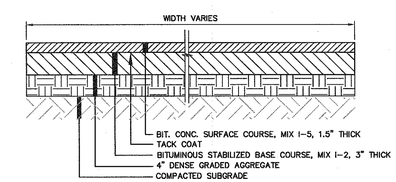

TYPICAL SECTION BITUMINOUS CONCRETE DRIVEWAY

N.T.S.

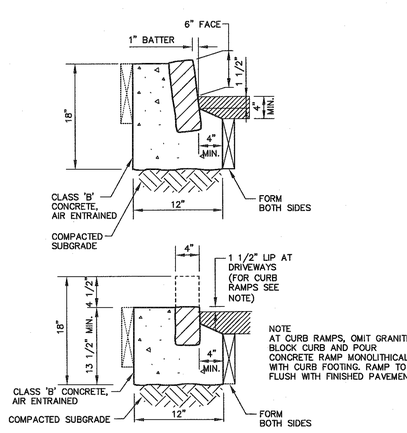

GRANITE BLOCK CURB DETAIL – ABUTTING SIDEWALK

SIMILAR TO STD. GRANITE BLOCK CURB EXCEPT AS SHOWN
N.T.S.

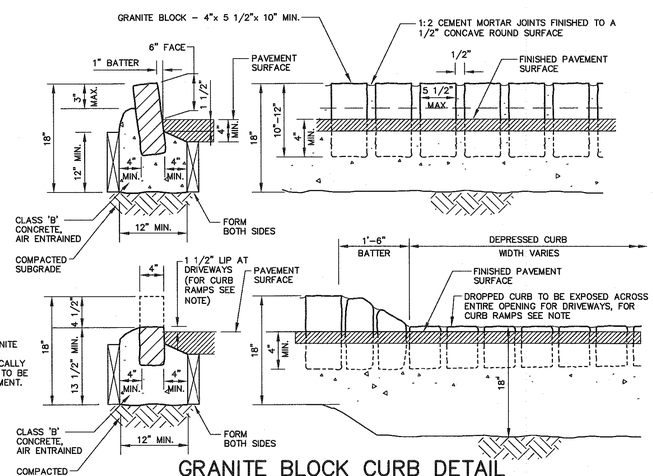

GRANITE BLOCK CURB DETAIL

N.T.S.

SEE SHEET 2 OF THIS SET FOR GENERAL NOTES AND REFERENCES.

REVISIONS					
6	5	4	3	2	1

DATE: 12/3/11
PROJ.: 030810
SCALE: AS SHOWN
CHKD.

OMLAND ENGINEERING ASSOCIATES, INC.
54 Horsehill Road
Cedar Knolls, New Jersey 07927
Phone: 973-359-8455
FAX: 973-359-8455
E-mail: oea@comland.com
NJ Certificate of Authorization No. 24GA28043700
STANLEY T. OMLAND, P.E., Professional Engineer, Lic. 24GE02728300
STANLEY T. OMLAND, P.E., Professional Engineer, Lic. 24GE02728300

THESE PLANS ARE FINAL FOR SANITARY SEWER DESIGN

AMENDED PRELIMINARY AND FINAL SITE PLANS FOR
EPSTEINS: MAPLE AVENUE TOWNHOMES

CONSTRUCTION DETAILS

BLOCK 6005, LOT 10
TOWN OF MORRISTOWN, MORRIS COUNTY, NEW JERSEY

SHEET No. 13 OF 14

P:\Cadpro\030810\Dwg\BLOCK 6005, Lot 10\10-Amended Site Plans\Dtl-M-Amended.dwg, 3 OF 4, 12/4/2011 2:54:48 PM, pdeighan, 1:1
P:\Cadpro\030810\Dwg\BLOCK 6005, Lot 10\10-Amended Site Plans\Dtl-M-Amended.dwg 12/04/11 02:54:50PM, pdeighan, LAYOUT:3 OF 4

LANDSCAPING NOTES

1. The contractor shall review architectural/engineering plans to become familiar with grading and surface utilities.
2. All equipment and tools shall be placed so as not to interfere or hinder the pedestrian and vehicular traffic flow.
3. The contractor shall coordinate with lighting contractor regarding timing of installation of plant material.
4. The contractor shall ensure that work does not interrupt established or projected drainage patterns.
5. During planting operations excess waste materials shall be promptly and frequently removed from the site.
6. The contractor shall verify the existence of underground utilities on the site 3 days prior to any excavation. Their exact location shall be verified in the field with the owner or general contractor prior to the commencement of any digging operations. In the event utilities are uncovered, the contractor shall be held responsible for all damage to the utilities and such damage shall not result in any additional expenses to the owner. Any damage of unreported lines shall not be the responsibility of the contractor.
7. If utility lines are encountered in excavation of tree pits, other locations for trees shall be made by the contractor without additional compensation. No changes of location shall be made without approval of the Board Engineer.
8. Maintain positive drainage out of planting beds at a minimum 2% slope. All grades, dimensions and existing conditions shall be verified by the contractor on site before construction begins. Any discrepancies shall be brought to the attention of the landscape architect, planning board engineer, or owner. Wire baskets to be removed prior to backfilling the plant pit.
9. Every possible safeguard shall be taken to protect building surfaces, equipment, and furnishing. The contractor shall be responsible for any damage or injury to person or property which may occur as a result of his negligence In the execution of the work.
10. In the event of variation between written quantities and quantities shown on the plan, the plans shall control. The contractor is responsible for verifying all plant quantities prior to the commencement of work. Sod and seed quantity take-offs are the responsibility of the contractor. All discrepancies shall be reported to the landscape architect or engineer for clarification prior to bidding. The contractor shall furnish plant material in sizes as specified in plant list.
11. Plants shall be located as shown on the drawings or as designated in the field.
12. Plants shall conform to current "American Standards for Nursery Stock" by American Association of Nurseryman (AAN).
13. All plants (B&B or container) shall be properly identified by weatherproof labels securely attached thereto before delivery to project site. Labels shall identify plants by species and size. Labels shall not be removed until the final inspection by the landscape architect or planning board engineer.
14. Any material and/or work may be rejected by the landscape architect or engineer if it does not meet the requirements of the specifications. All rejected materials shall be removed from the site by the contractor.
15. No substitutions shall be made without written consent of the owner, landscape architect or planning board engineer.
    The central leader should never be cut or damaged.
16. The contractor shall be wholly responsible for stability and conditions of all trees and shrubs and shall be legally liable for any damage caused by instability of any plant materials. Staking of all trees shall be done as indicated on the documents.
17. All proposed trees to be installed either entirely on or entirely out of planting beds. Planting bed lines are not to be obstructed. At shrubs and ground cover area shall be planted in continuous prepared bed and top dressed with 3-inch shredded hardwood mulch. Mulch shall have been shredded within the last six months.
18. All planting beds adjacent to lawn, sod, or seeded areas shall be spade edged.
19. Maintenance shall begin after each plant has been installed and shall continue until 90 days after final acceptance by the architect or owner representative. Maintenance includes: watering. pruning, fertilizing, weeding, mulching, replacement of sick or dead plants, and any other care necessary for the proper growth of the plant material. The contractor must be able to provide continued maintenance if requested by the owner.
20. Upon completion of all landscaping, an acceptance meeting of the work shall be held. The contractor shall notify the landscape architect or engineer or owner for scheduling the inspection at least seven (7) days prior to the anticipated inspection date.
21. All trees shall be guaranteed for 12 months from to date of acceptance. All shrubs and ground covers shall be guaranteed for 12 months from the date of acceptance. Replacement plants used shall be guaranteed for an additional 90 days.
22. All disturbed area of the site not planted with shrubs or ground cover shall be fine graded and seeded or sodded.
23. All sod shall be obtained from areas having growing conditions familiar to areas to be covered. Areas to be sodded shall be raked of stones and debris. Debris and stones over 1 inch in diameter shall be removed from the site. All damaged sod will be rejected. All sod must be placed with staggered joints, butted with no inequalities in grade. Place all sod in rows at right angles to slopes (where applicable).
24. All planting procedures shall conform to Omland Engineering Associates, Inc. specifications.

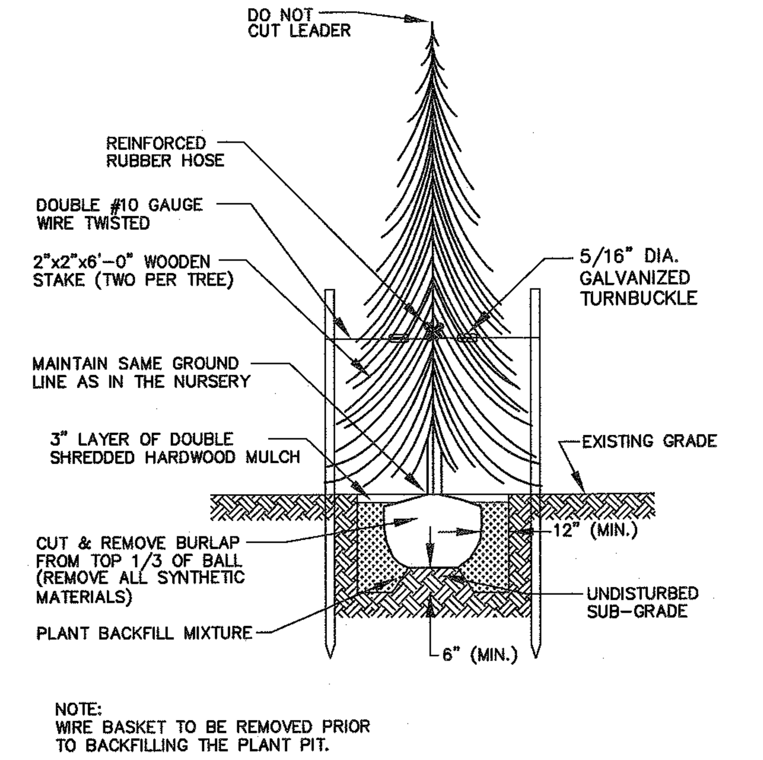

EVERGREEN TREE PLANTING DETAIL

N.T.S.

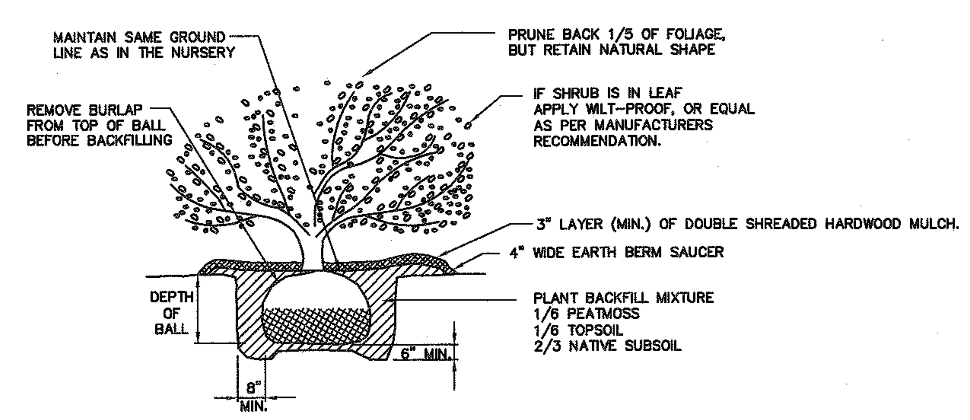

SHRUB PLANTING DETAIL

N.T.S.

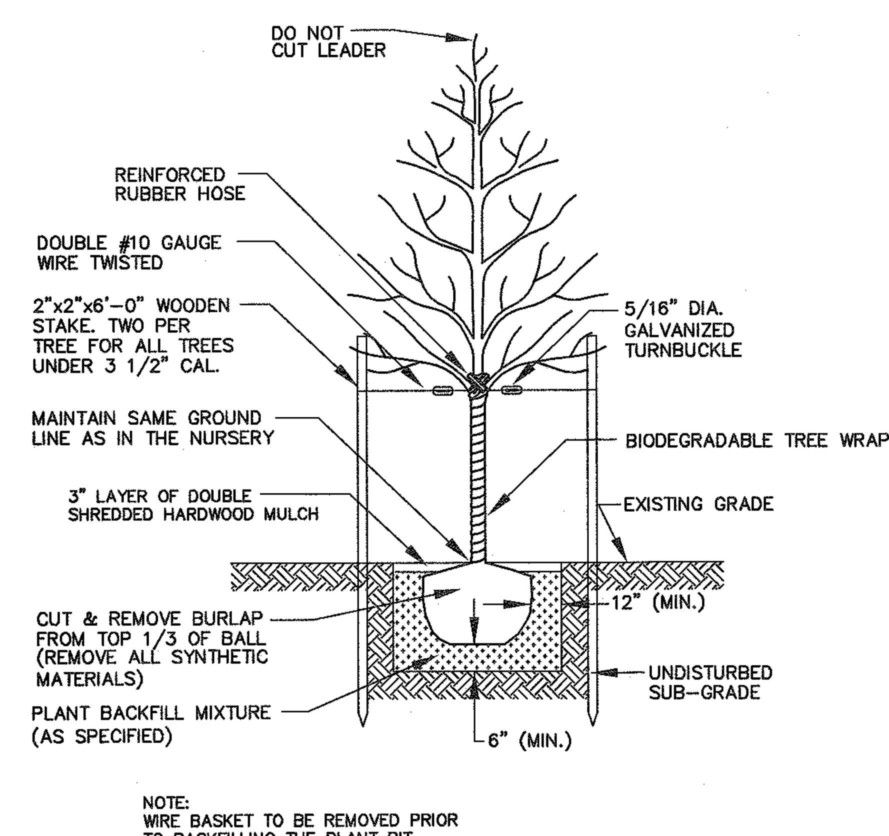

TREE PLANTING DETAIL

N.T.S.

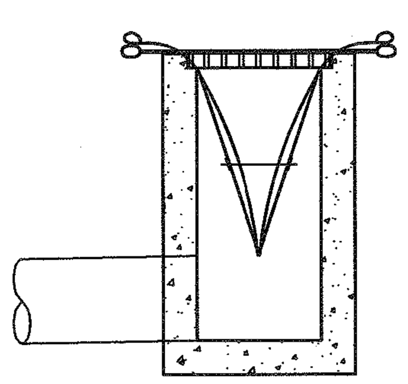

INSTALLATION DETAIL

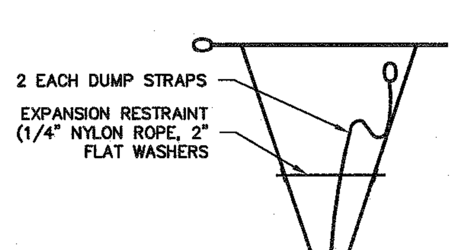

BAG DETAIL

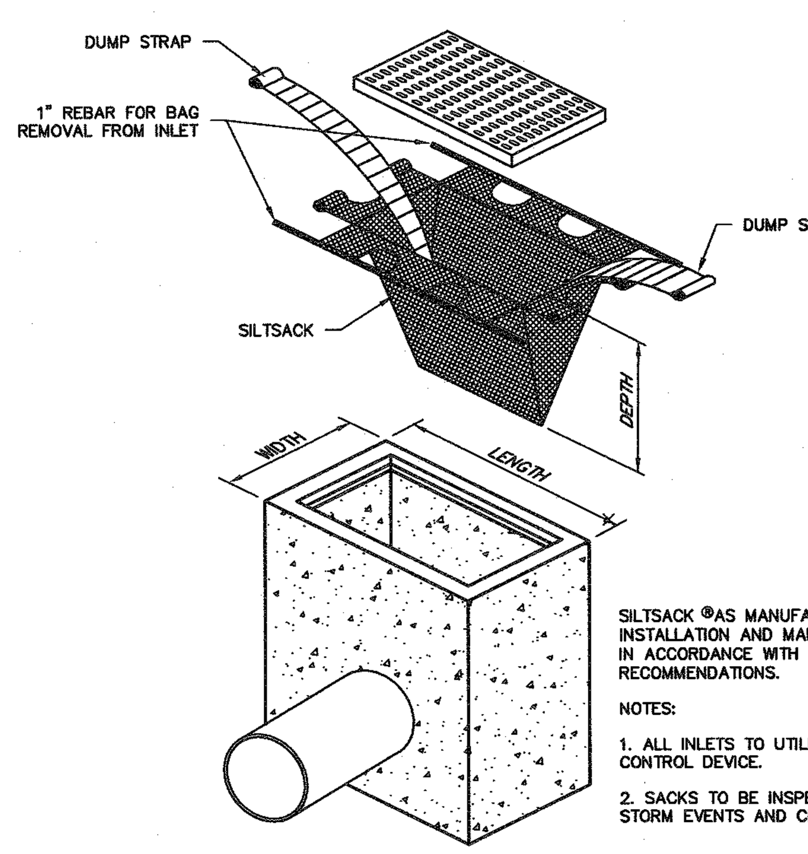

SILTSACK ®AS MANUFACTURED BY ACF. INSTALLATION AND MAINTENANCE SHALL BE IN ACCORDANCE WITH MANUFACTURER'S RECOMMENDATIONS.

NOTES:

1. ALL INLETS TO UTILIZE AN INLET SEDIMENT CONTROL DEVICE.
2. SACKS TO BE INSPECTED AFTER MAJOR STORM EVENTS AND CLEARED AS NECESSARY.

INLET SEDIMENT CONTROL DEVICE

NOT TO SCALE

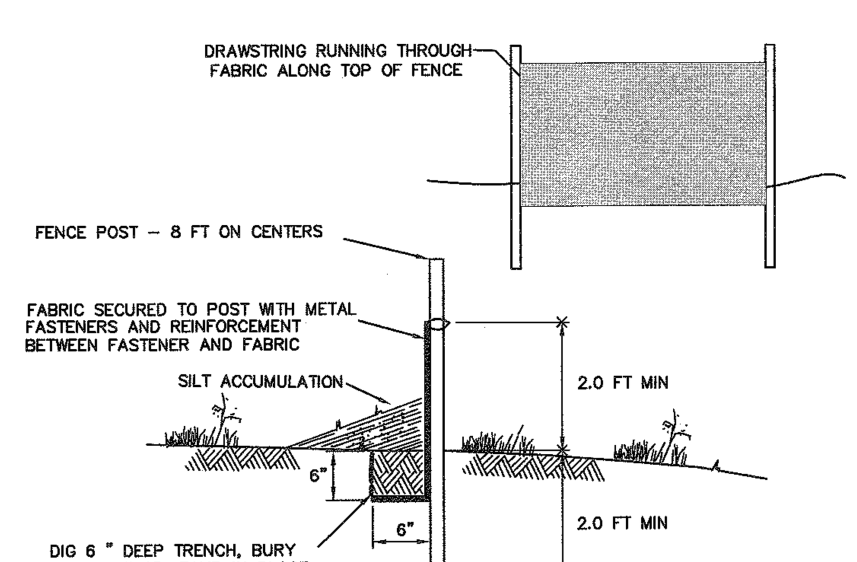

SILT FENCE DETAIL

N.T.S.

CONSTRUCTION SEQUENCE

1. INSTALL SOIL EROSION AND SEDIMENT CONTROL DEVICES. THIS INSTALLATION INCLUDES PLACEMENT OF STABILIZED CONSTRUCTION ENTRANCE, PERIMETER SILT FENCE, INLET FILTER PROTECTION AT EXISTING INLETS AND OTHER PROTECTION NECESSARY PER SESC PLAN.	2 DAYS
2. TREE REMOVAL, DEMOLITION AND EXCAVATION FOR NEW FOUNDATIONS.	2 WEEKS
3. INSTALL STORM SYSTEM AND UNDERGROUND UTILITIES PLACE INLET FILTER FABRIC (SILT SACKS) AS STRUCTURES ARE COMPLETED. ALL UNDERGROUND INFILTRATION FACILITIES MUST BE PROTECTED FROM SILT TO THE GREATEST EXTENT PRACTICAL. UNFILTERED RUNOFF MUST NOT ENTER THE UNDERGROUND INFILTRATION FACILITIES DURING CONSTRUCTION.	6 WEEKS
4. CONSTRUCT CURBING.	2 WEEKS
5. TEMPORARY SEED ALL AREAS TO BE LEFT EXPOSED FOR MORE THAN 30 DAYS	1 DAY
6. CONSTRUCT DRIVEWAYS APPLY BITUMINOUS STABILIZED BASE COURSE.	2 WEEKS
7. BUILDING CONSTUCTION TO RUN CONCURRENT WITH PREVIOUS ITEMS.	12 MONTHS
8. FINAL GRADE AROUND BUILDINGS.	2 WEEKS
9. INSTALL LIGHTING AND LANDSCAPING.	2 WEEKS
10.PERMANENT SEED ALL AREAS	2 WEEKS
11.APPLY FINAL BITUMINOUS CONCRETE SURFACE COURSE.	2 DAYS
12.INSTALL PAVEMENT MARKINGS.	1 DAY
13.REMOVE SOIL EROSION CONTROL DEVICES WHEN SITE IS STABILIZED.	1 DAY
TOTAL DURATION	**18 MONTHS**

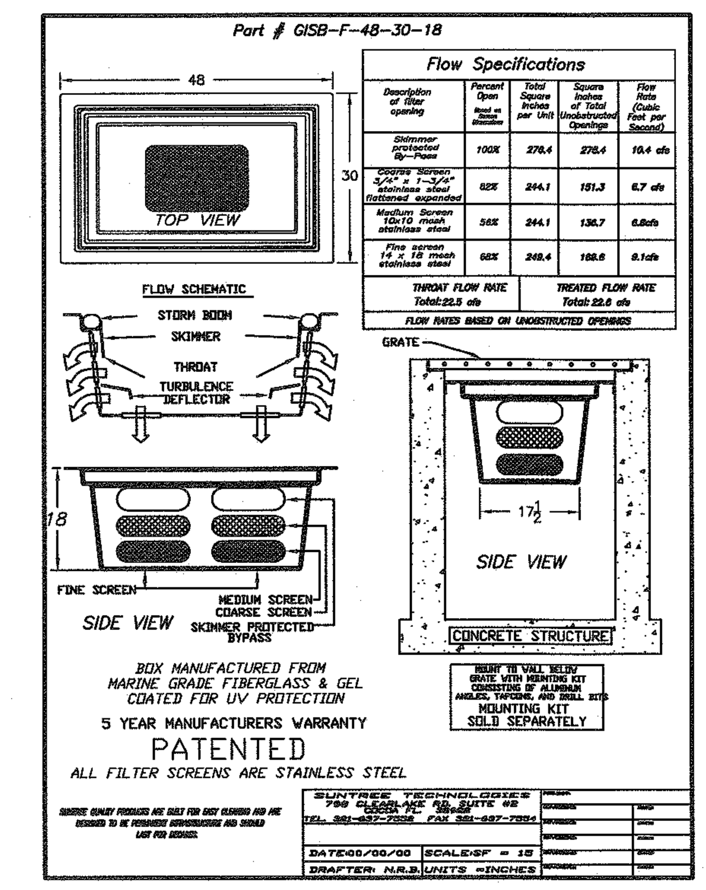

INLET FILTER BASKET DETAIL

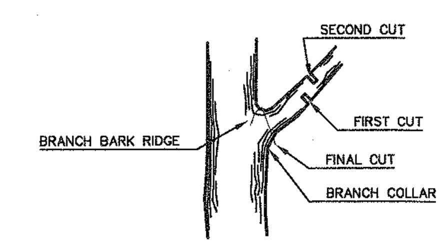

REMOVAL OF TREE LIMB

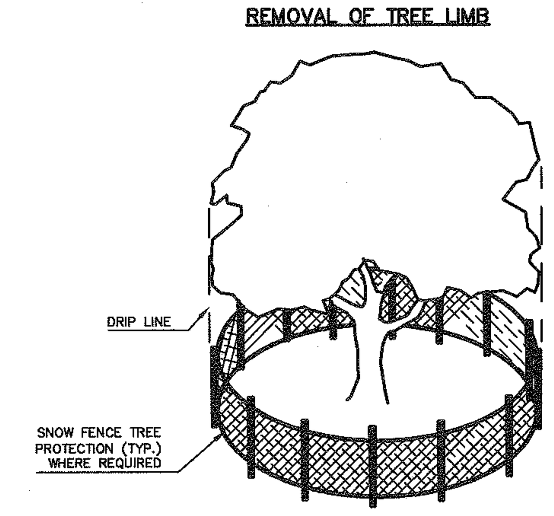

TREE PROTECTION DETAIL

REFER TO STANDARDS FOR SOIL EROSION AND SEDIMENT CONTROL IN NEW JERSEY: 9-1

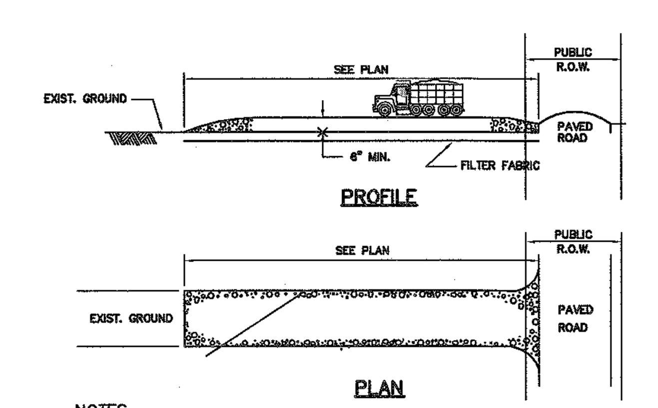

NOTES

STONE SIZE 1 1/2" – 2 1/2" CRUSHED STONE

WIDTH NOT LESS THAN FULL WIDTH AT POINTS OF EGRESS AND INGRESS.

WASHING: WHEN NECESSARY, WHEELS SHALL BE CLEANED TO REMOVE SEDIMENT PRIOR TO ENTRANCE ONTO PUBLIC R.O.W.. WHEN WASHING IS REQUIRED, IT SHALL BE DONE ON AN AREA STABILIZED WITH CRUSHED STONE WHICH DRAINS INTO AN APPROVED SEDIMENT BASIN.

MAINTENANCE – THE ENTRANCE SHALL BE MAINTAINED IN A CONDITION WHICH WILL PREVENT TRACKING OR FLOWING OF SEDIMENT ONTO PUBLIC R.O.W.. THIS MAY REQUIRE PERIODIC TOP DRESSING WITH ADDITIONAL STONE AS CONDITIONS DEMAND AND REPAIR AND/OR CLEANOUT OF ANY MEASURES USED TO TRAP SEDIMENT. ALL SEDIMENT SPILLED, DROPPED, WASHED, OR TRAPPED ONTO PUBLIC R.O.W. MUST BE REMOVED IMMEDIATELY.

WHEN THE CONSTRUCTION ACCESS EXITS ONTO A MAJOR ROADWAY, A PAVED TRANSITION AREA MAY BE INSTALLED BETWEEN THE MAJOR ROADWAY AND THE STONED ENTRANCE TO PREVENT LOOSE STONES FROM BEING TRANSPORTED OUT ONTO THE ROADWAY BY HEAVY EQUIPMENT ENTERING OR LEAVING THE SITE.

PERCENT SLOPE OF ROADWAY	LENGTH OF STONE REQUIRED	
	COARSE GRAINED SOILS	FINE GRAINED SOILS
0 TO 2%	50 ft.	100ft.
2 TO 5%	100ft.	200ft.
>5%	ENTIRE SURFACE STABILIZED WITH FABC BASE COURSE[1]	

1. AS PRESCRIBED BY LOCAL ORDINANCE OR OTHER GOVERNING AUTHORITY

STABILIZED CONSTRUCTION ENTRANCE

N.T.S

MORRIS COUNTY SOIL CONSERVATION DISTRICT
SOIL EROSION AND SEDIMENT CONTROL NOTES

1. All Soil Erosion and Sediment Control Practices will be installed in accordance with the Standards for Soil Erosion and Sediment Control In New Jersey and will be in place prior to any major soil disturbance, or in their proper sequence and maintained until permanent protection is established.

2. Any disturbed area that will be left exposed for more than thirty (30) days and not subject to construction traffic shall immediately receive a temporary seeding. If the season prohibits temporary seeding, the disturbed area will be mulched with straw or hay and tacked in accordance with the New Jersey Standards. See Note 21 below.

3. Permanent vegetation is to be established on exposed areas within ten (10) days after final grading. Mulch is to be used for protection until vegetation is established. See Note 22 below.

4. Immediately following initial disturbance or rough grading all critical areas (steep slopes, sandy soils, wet conditions) subject to erosion will receive a temporary seeding in accordance with Note 21 below.

5. Temporary Diversion Berms are to be installed on all cleared roadways and easement areas. See the Diversion Detail.

6. Permanent seeding and stabilization to be in accordance with the "Standards for Permanent Vegetative Cover, for Soil Stabilization Cover". Specified rates and locations shall be on the approved Soil Erosion and Sediment Control Plan.

7. The site shall at all times be graded and maintained so that all storm water runoff is diverted to Soil Erosion and Sediment Control facilities.

8. All sedimentation structures (silt fence, inlet filters and sediment basins) will be inspected and maintained daily.

9. Stockpiles shall not be located within 50 feet of a floodplain, slope, drainage facility, or roadway. All stockpile bases shall have a silt fence properly entrenched at the toe of slope.

10. A Stabilized Construction Access will be installed, whenever an earthen road intersects with a paved road. See the Stabilized Construction Access detail and chart for dimensions

11. All new roadways will be treated with a suitable subbase upon establishment of final grade elevations.

12. Paved roadways must be kept clean at all times.

13. Before discharge points become operational, all storm drainage outlets will be stabilized as required.

14. All dewatering operations must be discharged directly into a sediment filter area. The filter should be composed of a fabric or approved material. See the Dewatering detail.

15. Any sediment basins will be cleaned when the capacity has been reduced by 50%. A clean out elevation will be identified on the plan and a marker installed on the site.

16. During and after construction, the applicant will be responsible for the maintenance and upkeep of the drainage structures, vegetation cover, and any other measures deemed appropriate by the District. Said responsibility will end when completed work is approved by the Morris County Soil Conservation District.

17. All trees outside the disturbance limit indicated on the subject plan or those trees within the disturbance area which are designated to remain after construction are to be protected with tree protection devices. See the Tree Protection detail.

18. The Morris County Soil Conservation District may request additional measures to minimize on site or off site erosion problems during construction.

19. The MORRIS COUNTY S.C.D. must be notified, in writing, at least 72 hours prior to any land disturbance, and a pre-construction meeting held.

20. TOPSOIL STOCKPILE PROTECTION

a) Apply ground limestone at a rate of 90 lbs/1000 S.F.
b) Apply fertilizer (10-20-10) at a rate of 11 lbs/1000 S.F.
c) Apply Perennial Ryegrass seed at a rate of 1 lb/1000 S.F. and Annual Ryegrass at 1 lb/1000 S.F.
d) Mulch stockpile with straw or hay at a rate of 90 lbs/1000 S.F.
e) Apply a liquid mulch binder or tack to straw or hay mulch.
f) Properly entrench a silt fence at the bottom of the stockpile.

21.TEMPORARY STABILIZATION SPECIFICATIONS

a) Apply ground limestone at a rate of 90 lbs/1000 S.F.
b) Apply fertilizer (10-20-10) at a rate of 11 lbs/1000 S.F.
c) Apply Perennial Ryegrass at 1 Lb/1000 S.F.and Annual Ryegrass at 1 Lb/1000 S.F.
d) Mulch stockpile with straw or hay at a rate of 90 lbs/1000 S.F.
e) Apply a liquid mulch binder or tack to straw or hay mulch.

22) PERMANENT STABILIZATION SPECIFICATIONS

a) Apply topsoil to a depth of 5 inches (unsettled).
b) Apply ground limestone at a rate of 90 lbs/1000 S.F. and work four inches into soil.
c) Apply fertilizer (10-20-10) at a rate of 11 lbs/1000 S.F.
d) Mix to be NJ SESC #16, 80% Tall Fescue, 10% Perennial Rye and 10% Bluegrass, 200#/Acre rate
e) Mulch stockpile with straw or hay at a rate of 90 lbs/1000 S.F.
f) Apply a liquid mulch binder or tack to straw or hay mulch

NOTE: 72 HOURS PRIOR TO ANY SOIL DISTURBANCE, NOTICE IN WRITING, SHALL BE GIVEN TO THE MORRIS COUNTY SOIL CONSERVATION DISTRICT AND A PRE-CONSTRUCTION MEETING HELD.

STANDARD FOR DUST CONTROL (Per Standards... Dust Control 16-1, July 1999)

DEFINITION–The control of dust on construction sites and roads.

PURPOSE– To prevent blowing and movement of dust from exposed soil surfaces, reduce on and off-site damage and health hazards, and improve traffic safety.

CONDITION WHERE PRACTICE APPLIES– This practice is applicable to areas subject to dust blowing and movement where on- and off-site damage is likely without treatment. Consult with local municipal ordinances on any restrictions.

WATER QUALITY ENHANCEMENT–Sediments deposited as "dust" are often fine colloidal material which is extremely difficult to remove from water once it becomes suspended. Use of this standard will help to control the generation of dust from construction sites and subsequent blowing and deposition into local surface water resources.

PLANNING CRITERIA– The following methods should be considered for controlling dust:

Mulches–See Standards for Stabilization with mulches Only (p. 5-1)

Vegetative Cover–See Standards for Temporary Vegetative Cover (p. 7-1), Permanent Vegetative Cover for Soil Stabilization (p. 4-1) and Permanent Stabilization with Sod (p. 6-1)

Spray-on Adhesives–On mineral soils (not effective on muck soils). Keep traffic off these areas.

Table 16-1: Dust Control Materials:

	Water Dilution	Type of Nozzle	Gal./Acre
Anionic asphalt emulsion	7:1	Coarse Spray	1,200
Latex Emulsion	12.5:1	Fine Spray	235
Resin in Water	4:1	Fine Spray	300
Polyacrylamide (PAM) – spray on	Apply according to manufacturer's instructions. May also be used as an additive to sediment basins to flocculate and precipitate suspended colloids. See Sediment Basin standard (pg 26-1).		
Polyacrylamide (PAM) – dry spray			
Acidulated Soy Bean Soap Stick	None	Coarse Spray	1,200

Tillage: To roughen surface and bring clods to the surface. This is a temporary emergency measure which should be used before soil blowing starts. Begin plowing on windward side of site. Chisel-type plows spaced about 12 inches apart, and spring-toothed harrows are examples of equipment which may produce the desired effect.

Sprinkling: Site is sprinkled until the surface is wet.

Barriers: Solid board fences, snow fences, burlap fences, crate walls, bales of hay, and similar material can be used to control air currents and soil blowing.

Calcium Chloride: Shall be in the form of loose, dry granules of flakes fine enough to feed through commonly used spreaders at a rate that will keep surface moist but not cause pollution or plant damage. If used on steeper slopes, then use other practices to prevent washing into streams or accumulation around plants.

Stone: Cover surface with crushed stone or coarse gravel.

SEE SHEET 2 OF THIS SET FOR GENERAL NOTES AND REFERENCES.

THESE PLANS ARE FINAL FOR SANITARY SEWER DESIGN

AMENDED PRELIMINARY AND FINAL SITE PLANS FOR
EPSTEINS: MAPLE AVENUE TOWNHOMES
CONSTRUCTION DETAILS
BLOCK 6005, LOT 10
TOWN OF MORRISTOWN, MORRIS COUNTY, NEW JERSEY

OMLAND ENGINEERING ASSOCIATES, INC.
54 Horsehill Road
Cedar Knolls, New Jersey 07927
Phone: 973-359-8400
FAX: 973-359-8455
E-mail: oea@omland.com
NJ Certificate of Authorization No. 24GA28043700
STANLEY T. OMLAND, N.J. Professional Engineer, Lic. 24GE03069600
DAVID B. DIXON, N.J. Professional Land Surveyor Lic. 24GS02728200

DATE: 12/3/11
PROJ.: 030810
SCALE: AS SHOWN
CHKD.

THIS DRAWING AND ALL INFORMATION CONTAINED HEREIN IS AUTHORIZED FOR USE ONLY BY THE PARTY FOR WHOM THE WORK WAS CONTRACTED OR TO WHOM IT IS CERTIFIED. THIS DRAWING MAY NOT BE COPIED, REUSED, DISCLOSED, DISTRIBUTED OR RELIED UPON FOR ANY OTHER PURPOSE WITHOUT THE WRITTEN CONSENT OF OMLAND ENGINEERING ASSOCIATES, INC. COPYRIGHT 2011 OMLAND ENGINEERING ASSOCIATES, INC. ALL RIGHTS RESERVED

REVISIONS

9	
8	
7	
6	
5	
4	
3	
2	
1	

SHEET No. 14 OF 14